Automatic Washers

Refer to Page 5 for Model Numbers

Parts

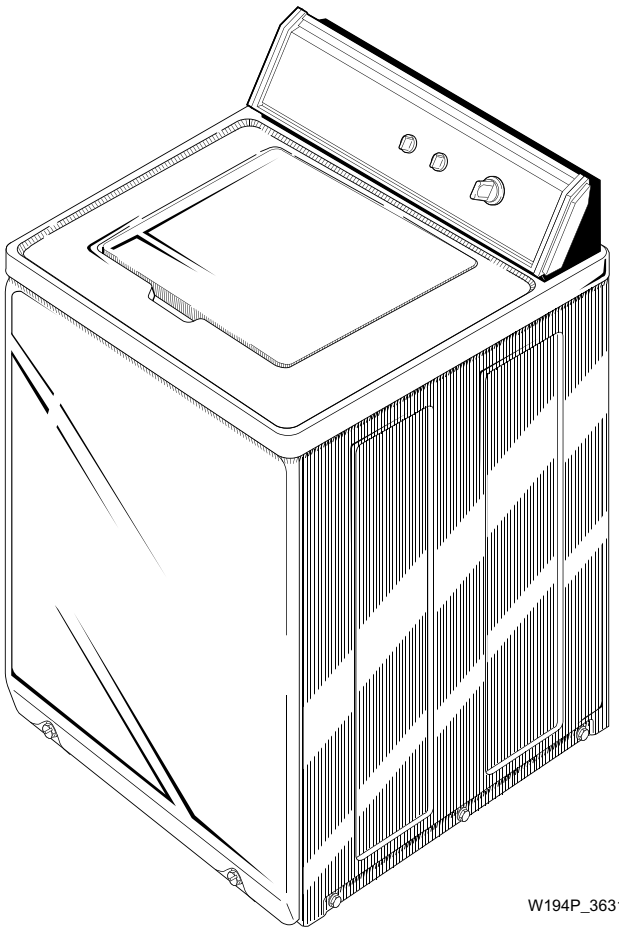

W194P_36313

Alliance Laundry Systems

www.comlaundry.com

Part No. 36313R5
June 2011

Table of Contents

Title	Page
Parts Ordering Information	3
Nameplate Location	3
Model Identification	5
Graphic Panel, Control Hood and Controls (Drawing 1 of 12)	6
Graphic Panel, Control Hood and Controls (Drawing 2 of 12)	8
Graphic Panel, Control Hood and Controls (Drawing 3 of 12)	10
Graphic Panel, Control Hood and Controls (Drawing 4 of 12)	12
Graphic Panel, Control Hood and Controls (Drawing 5 of 12)	14
Graphic Panel, Control Hood and Controls (Drawing 6 of 12)	16
Graphic Panel, Control Hood and Controls (Drawing 7 of 12)	18
Graphic Panel, Control Hood and Controls (Drawing 8 of 12)	20
Graphic Panel, Control Hood and Controls (Drawing 9 of 12)	22
Graphic Panel, Control Mounting Plate and Controls (Drawing 1 of 2)	24
Graphic Panel, Control Mounting Plate and Controls (Drawing 2 of 2)	26
Graphic Panel, Control Hood and Controls (Drawing 10 of 12)	28
Graphic Panel, Control Hood and Controls (Drawing 11 of 12)	30
Graphic Panel, Control Hood and Controls (Drawing 12 of 12)	32
Out-of-Balance Switch	34
Cabinet Top and Loading Door	36
Cabinet Top, Loading Door and Control Hood Rear Panel	38
Inlet Hose, Fill Hose and Mixing Valve Mounting Bracket	40
Mixing Valve Assembly	42
Agitator and Drive Bell	44
Clothes Guard, Washtub, Lint Filter and Hub	46
Motor, Mounting Bracket, Belt, Pump and Idler Assembly	48
Motor, Mounting Bracket, Belts and Idler Assembly	50
Outer Tub, Cover and Pressure Hose	52
Direct Drive Pump with Plastic Drain Hose and Siphon Break Kit	54
Belt Drive Pump with Plastic Drain Hose and Siphon Break Kit	56
Belt Drive Pump with Rubber Drain Hose and Siphon Break Kit	58
Electric Drain Pump with Rubber Drain Hose and Siphon Break Kit	60
Electric Drain Pump with Plastic Drain Hose and Siphon Break Kit	62
Electric Drain Pump	64
Bearing Housing, Brake, Pulley and Pivot Dome	66
Transmission Assembly and Balance Ring	68
34526P Transmission Assembly	70
Front Panel, Base and Cabinet Assembly	72
Terminal Block and Hardware	74
Connection Blocks, Terminals and Terminal Extractor Tool	76
Special Tools (Drawing 1 of 2)	78
Special Tools (Drawing 2 of 2)	80

© Copyright 2011, Alliance Laundry Systems LLC

All rights reserved. No part of the contents of this book may be reproduced or transmitted in any form or by any means without the expressed written consent of the publisher.

Power Cord and Terminals 82
Wire Harnesses and Wires 84
Parts Index 87

© Copyright, Alliance Laundry Systems LLC – DO NOT COPY or TRANSMIT

Parts Ordering Information

If literature or replacement parts are required, contact the source from whom the machine was purchased or contact Alliance Laundry Systems at (920) 748-3950 for the name and address of the nearest authorized parts distributor.

For technical assistance, call either of the numbers listed below:

(920) 748-3121 Ripon, Wisconsin

+32 56 41 20 54 Wevelgem, Belgium

Nameplate Location

When calling or writing about your product, be sure to mention model and serial numbers. Model and serial numbers are located on nameplate(s) as shown.

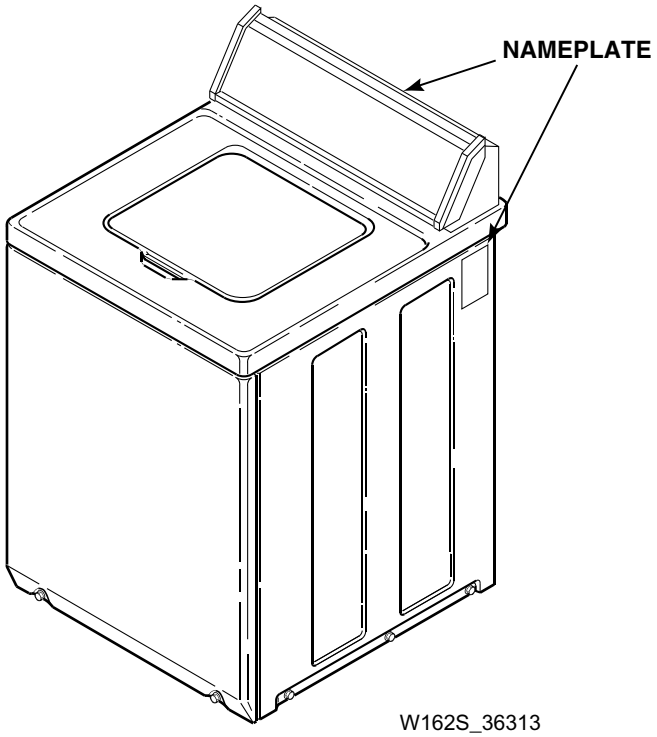

© Copyright, Alliance Laundry Systems LLC – DO NOT COPY or TRANSMIT

Notes

© Copyright, Alliance Laundry Systems LLC – DO NOT COPY or TRANSMIT

Model Identification

Information in this manual is applicable to these washer models:

AWM250*-2200	AWM392*-3000	AWM393*21000	KAW793*-3050	SWM190*
AWM251*-2200	AWM392*-3300	AWM393*22200	KWM372*-1109	UWE993*-1102
AWM251*-99E7	AWM392*21000	AWM393*23000	KWM373*-1109	UWM392*-1000
AWM270*-3062	AWM392*22200	AWM393*23050	KWM472*-1109	UWM392*-1102
AWM292*-2200	AWM392*23000	AWM393*23059	KWM573*-1109	UWM593*-1102
AWM292*22200	AWM392*23300	AWM393*23069	NWM393*-3059	ZWM372*-3059
AWM293*-2200	AWM393*-1000	AWM393*23300	PA9392*-2200	ZWM373*-3059
AWM293*22200	AWM393*-2200	AWM593*-2200	PA9393*-2200	ZWM373*-3069
AWM372*-3062	AWM393*-3000	AWM593*22200	PA9693*-2200	
AWM373*-3062	AWM393*-3050	BWM372*	RWM274*-3062	
AWM392*-1000	AWM393*-3059	KAW393*-3050	RWM372*-3062	
AWM392*-2200	AWM393*-3300	KAW693*-3050	RWM373*-3062	

*** Add Letter To Designate Color. H - Harvest Gold L - Almond W - White**

© Copyright, Alliance Laundry Systems LLC – DO NOT COPY or TRANSMIT

Graphic Panel, Control Hood and Controls (Drawing 1 of 12)

Models AWM270*-3062, AWM372*-3062, AWM373*-3062, BWM372*, KWM372*-1109, KWM373*-1109, KWM472*-1109 and KWM573*-1109

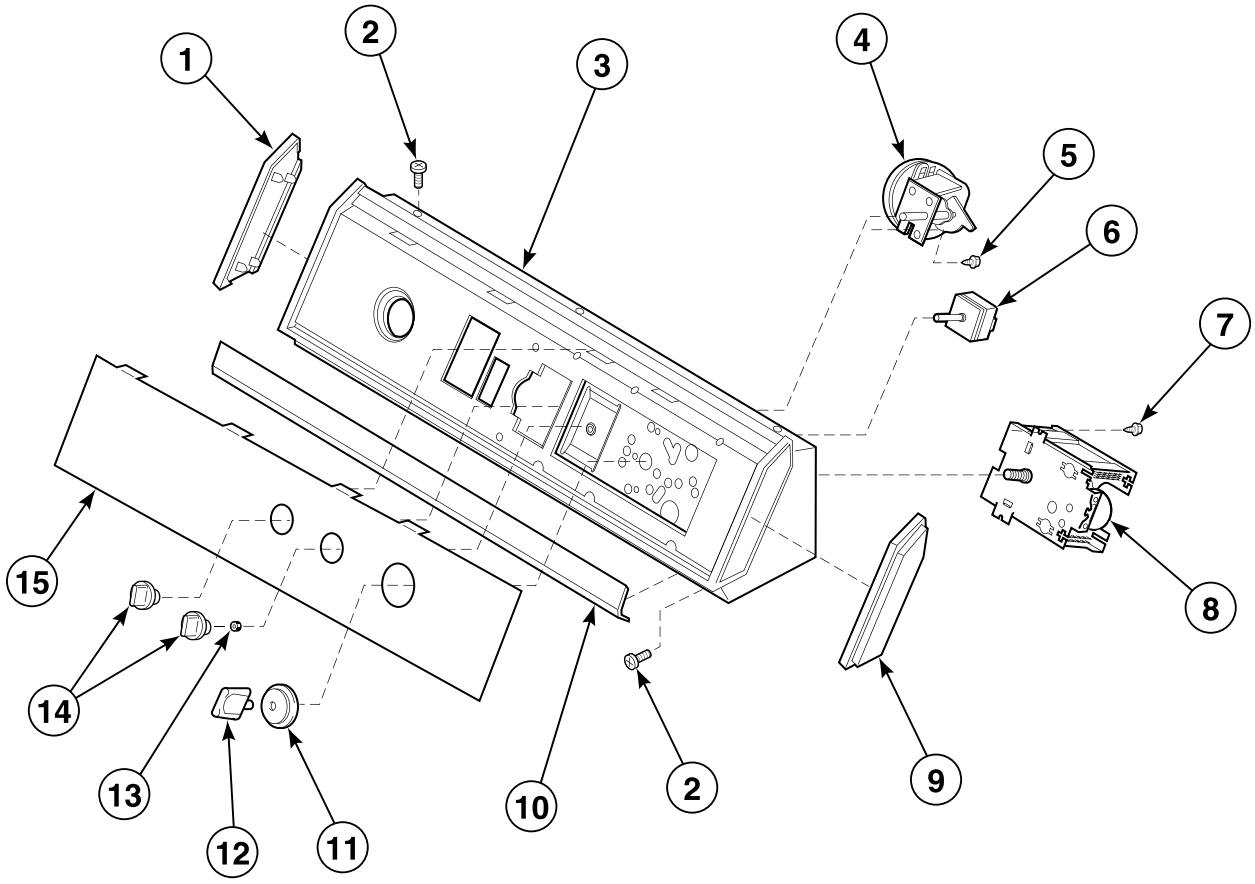

W172P_36313

© Copyright, Alliance Laundry Systems LLC – DO NOT COPY or TRANSMIT

Graphic Panel, Control Hood and Controls (Drawing 1 of 12)

REF	PART NO.	DESCRIPTION	COMMENTS
1	31249	End Cap	Left
2	32993	Screw	
3	N/A	Hood and Mounting Plate Assembly	Models through Serial No. 9511021616
	37845	Control Hood Assembly	Models starting Serial No. 9511021617
4	39035P	Pressure Switch	Model AWM270*-3062
	201927P	Pressure Switch	All other models
5	31260	Screw	
6	32189	Water Temperature Switch	Model KWM573*-1109 through Serial No. 9511021616
	36335	Temperature Switch	Model KWM573*-1109 starting Serial No. 9511021617
	21300	Temperature Switch	All other models through Serial No. 9511021616
	35115	Temperature Switch	All other models starting Serial No. 9511021617
7	23962	Screw	
8	36288P	Timer	Model AWM270*-3062
	201013P	Timer	Models AWM372*-3062 and AWM373*-3062
	32039P	Timer	Model KWM573*-1109
	31239P	Timer	All other models
9	31248	End Cap	Right
10	33123R	Trim	Models KWM472*-1109 and KWM573*-1109
11	33817	Timer Skirt Assembly	
12	33898W	Timer Knob	
13	57584	Nut	Use with 21300 Temperature Switch and 32189 Water Temperature Switch
14	33688	Knob Assembly	
15	N/A	Graphic Panel	Model AWM270*-3062
	N/A	Graphic Panel	Models AWM372*-3062 and AWM373*-3062
	N/A	Graphic Panel	Model BWM372*
	35627	Graphic Panel	Models KWM372*-1109 and KWM373*-1109
	N/A	Graphic Panel	Model KWM472*-1109
	35626	Graphic Panel	Model KWM573*-1109

*** Add Letter To Designate Color. H - Harvest Gold L - Almond W - White**

N/A = Part no longer available

© Copyright, Alliance Laundry Systems LLC – DO NOT COPY or TRANSMIT

Graphic Panel, Control Hood and Controls (Drawing 2 of 12)

Models AWM250*-2200, AWM251*-2200, AWM292*-2200, AWM293*-2200, AWM392*-2200, AWM393*-2200, AWM593*-2200, PA9392*-2200 and PA9393*-2200

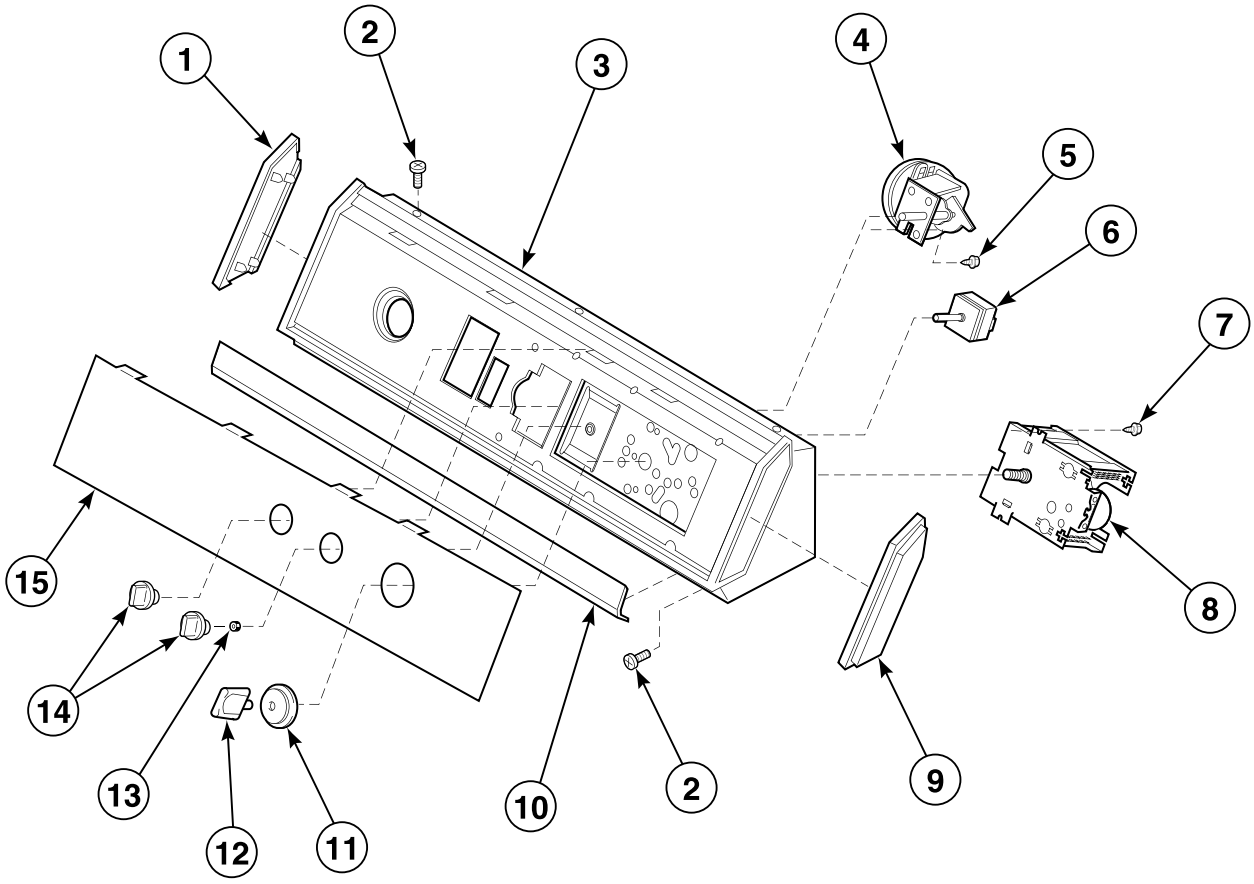

W172P_36313

© Copyright, Alliance Laundry Systems LLC – DO NOT COPY or TRANSMIT

Graphic Panel, Control Hood and Controls (Drawing 2 of 12)

REF	PART NO.	DESCRIPTION	COMMENTS
1	31249	End Cap	Left
2	31752	Screw	
3	31735	Control Hood Assembly	Models PA9392*-2200 and PA9393*-2200 through Serial No. 9511021616
	37843	Control Hood Assembly	Models PA9392*-2200 and PA9393*-2200 starting Serial No. 9511021617
	31811	Hood and Mounting Bracket Assembly	All other models through Serial No. 9511021616
	N/A	Control Hood Assembly	All other models starting Serial No. 9511021617
4	201927P	Pressure Switch	
5	31260	Screw	
6	32189	Water Temperature Switch	Model AWM593*-2200 through Serial No. 9511021616
	36335	Temperature Switch	Model AWM593*-2200 starting Serial No. 9511021617
	21300	Temperature Switch	All other models through Serial No. 9511021616
	35115	Temperature Switch	All other models starting Serial No. 9511021617
7	23962	Screw	
8	31238P	Timer	Models AWM292*-2200 and AWM293*-2200
	32039P	Timer	Model AWM593*-2200
	31239P	Timer	All other models
9	31248	End Cap	Right
10	33123R	Trim	Model AWM593*-2200
11	33817	Timer Skirt Assembly	
12	33897	Timer Knob	
13	57584	Nut	Use with 21300 Temperature Switch and 32189 Water Temperature Switch
14	N/A	Knob Assembly	
15	N/A	Graphic Panel	Models AWM292*-2200 and AWM293*-2200
	35233	Graphic Panel	Model AWM593*-2200
	N/A	Graphic Panel	Models PA9392*-2200 and PA9393*-2200
	N/A	Graphic Panel	Models AWM392*-2200 and AWM393*-2200

*** Add Letter To Designate Color. H - Harvest Gold L - Almond W - White**

N/A = Part no longer available

© Copyright, Alliance Laundry Systems LLC – DO NOT COPY or TRANSMIT

Graphic Panel, Control Hood and Controls (Drawing 3 of 12)

Models AWM292*22200, AWM293*22200, AWM392*22200, AWM393*22200 and AWM593*22200

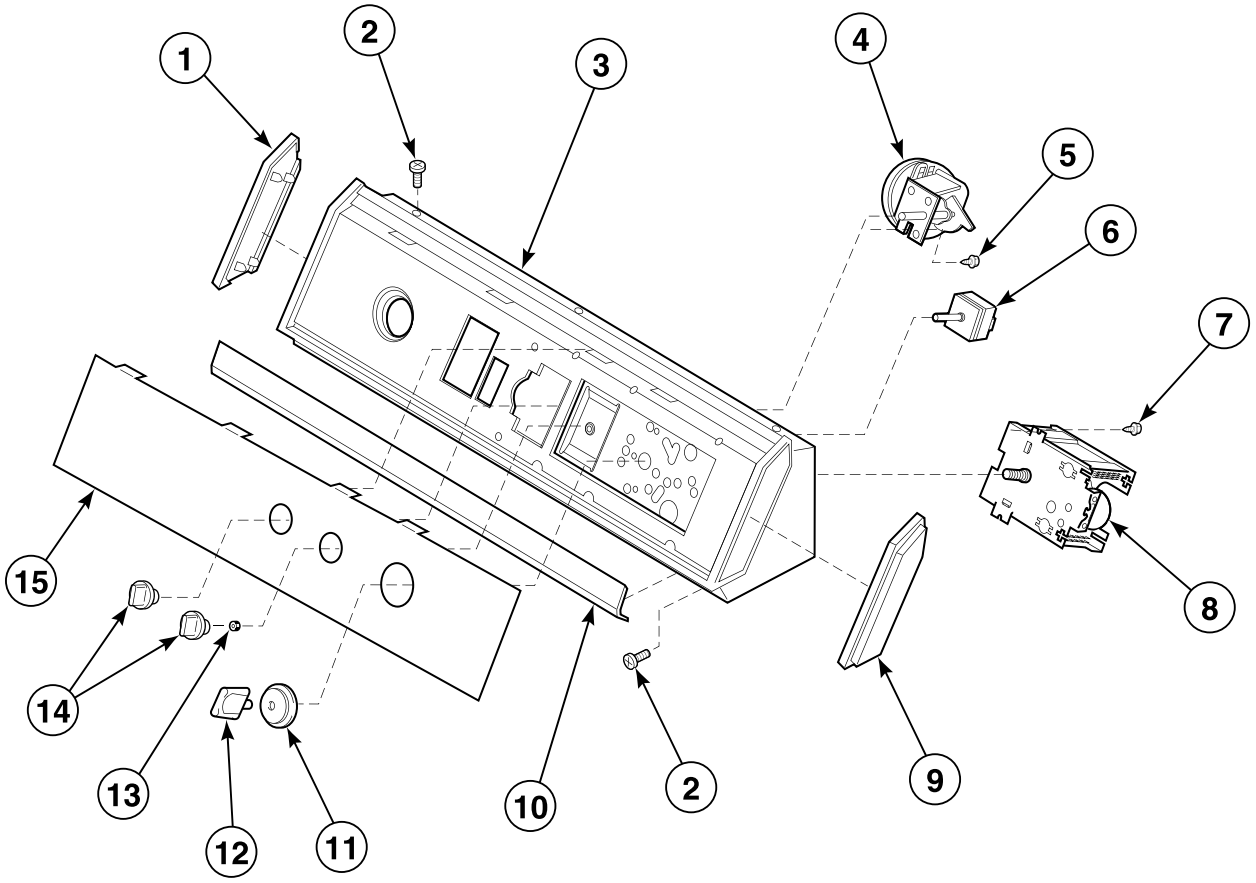

W172P_36313

© Copyright, Alliance Laundry Systems LLC – DO NOT COPY or TRANSMIT

Graphic Panel, Control Hood and Controls (Drawing 3 of 12)

REF	PART NO.	DESCRIPTION	COMMENTS
1	31249	End Cap	Left
2	31752	Screw	
3	31811	Hood and Mounting Bracket Assembly	Models through Serial No. 9511021616
	N/A	Control Hood Assembly	Models starting Serial No. 9511021617
4	201927P	Pressure Switch	
5	31260	Screw	
6	32189	Water Temperature Switch	Model AWM593*22200 through Serial No. 9511021616
	36335	Temperature Switch	Model AWM593*22200 starting Serial No. 9511021617
	21300	Temperature Switch	All other models through Serial No. 9511021616
	35115	Temperature Switch	All other models starting Serial No. 9511021617
7	23962	Screw	
8	31238P	Timer	Models AWM292*22200 and AWM293*22200
	36608P	Timer	Model AWM593*22200
	31239P	Timer	Models AWM392*22200 and AWM393*22200
9	31248	End Cap	Right
10	33123R	Trim	Model AWM593*22200
11	33817	Timer Skirt Assembly	
12	33897	Timer Knob	
13	57584	Nut	Use with 21300 Temperature Switch and 32189 Water Temperature Switch
14	N/A	Knob Assembly	
15	N/A	Graphic Panel	

*** Add Letter To Designate Color. H - Harvest Gold L - Almond W - White**

N/A = Part no longer available

© Copyright, Alliance Laundry Systems LLC – DO NOT COPY or TRANSMIT

Graphic Panel, Control Hood and Controls (Drawing 4 of 12)

Models AWM392*-1000, AWM392*-3000, AWM392*-3300, AWM393*-1000,
AWM393*-3000, AWM393*-3050 and AWM393*-3300

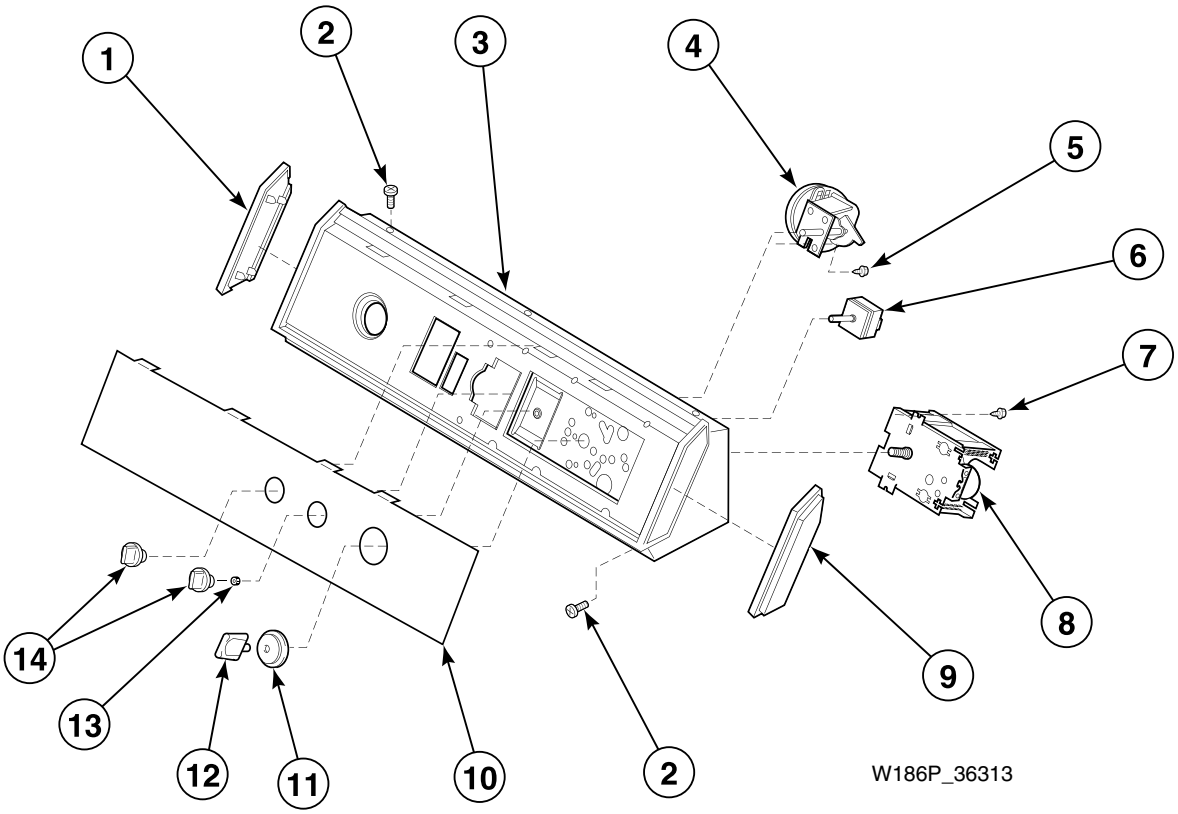

© Copyright, Alliance Laundry Systems LLC – DO NOT COPY or TRANSMIT

Graphic Panel, Control Hood and Controls (Drawing 4 of 12)

REF	PART NO.	DESCRIPTION	COMMENTS
1	31249	End Cap	Left
2	31752	Screw	
3	31811	Hood and Mounting Bracket Assembly	Models through Serial No. 9511021616
	N/A	Control Hood Assembly	Models starting Serial No. 9511021617
4	201927P	Pressure Switch	
5	31260	Screw	
6	21300	Temperature Switch	Models through Serial No. 9511021616
	35115	Temperature Switch	Models starting Serial No. 9511021617
7	23962	Screw	
8	31241P	Timer	Models AWM392*-3000 and AWM393*-3000
	35531P	Timer	Model AWM393*-3050
	31242P	Timer	Model AWM392*-3300
	31243P	Timer	All other models
9	31248	End Cap	Right
10	N/A	Graphic Panel	
11	33817	Timer Skirt Assembly	
12	33897	Timer Knob	
13	57584	Nut	Use with 21300 Temperature Switch
14	N/A	Knob Assembly	

*** Add Letter To Designate Color. H - Harvest Gold L - Almond W - White**

N/A = Part no longer available

© Copyright, Alliance Laundry Systems LLC – DO NOT COPY or TRANSMIT

Graphic Panel, Control Hood and Controls (Drawing 5 of 12)

Models AWM392*21000, AWM392*23000, AWM392*23300, AWM393*21000, AWM393*23000, AWM393*23050, AWM393*23300 and UWM392*-1000

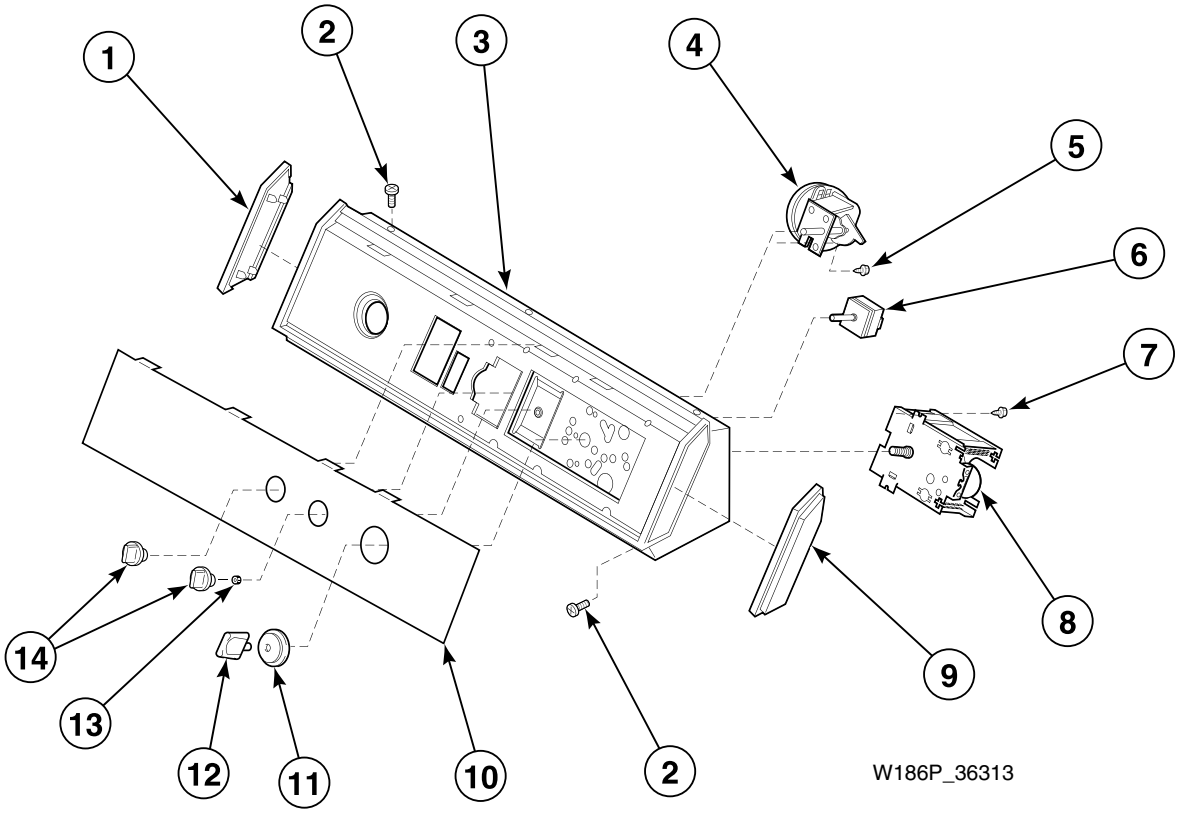

© Copyright, Alliance Laundry Systems LLC – DO NOT COPY or TRANSMIT

Graphic Panel, Control Hood and Controls (Drawing 5 of 12)

REF	PART NO.	DESCRIPTION	COMMENTS
1	31249	End Cap	Left
2	31752	Screw	
3	31811	Hood and Mounting Bracket Assembly	Models through Serial No. 9511021616
	N/A	Control Hood Assembly	Models starting Serial No. 9511021617
4	201927P	Pressure Switch	
5	31260	Screw	
6	21300	Temperature Switch	Models through Serial No. 9511021616
	35115	Temperature Switch	Models starting Serial No. 9511021617
7	23962	Screw	
8	31241P	Timer	Models AWM392*23000 and AWM393*23000
	35531P	Timer	Model AWM393*23050
	31242P	Timer	Model AWM392*23300
	31243P	Timer	All other models
9	31248	End Cap	Right
10	N/A	Graphic Panel	
11	33817	Timer Skirt Assembly	
12	33897	Timer Knob	
13	57584	Nut	Use with 21300 Temperature Switch
14	N/A	Knob Assembly	

*** Add Letter To Designate Color. H - Harvest Gold L - Almond W - White**

N/A = Part no longer available

© Copyright, Alliance Laundry Systems LLC – DO NOT COPY or TRANSMIT

Graphic Panel, Control Hood and Controls (Drawing 6 of 12)

Models AWM393*-3059, AWM393*23059 and NWM393*-3059

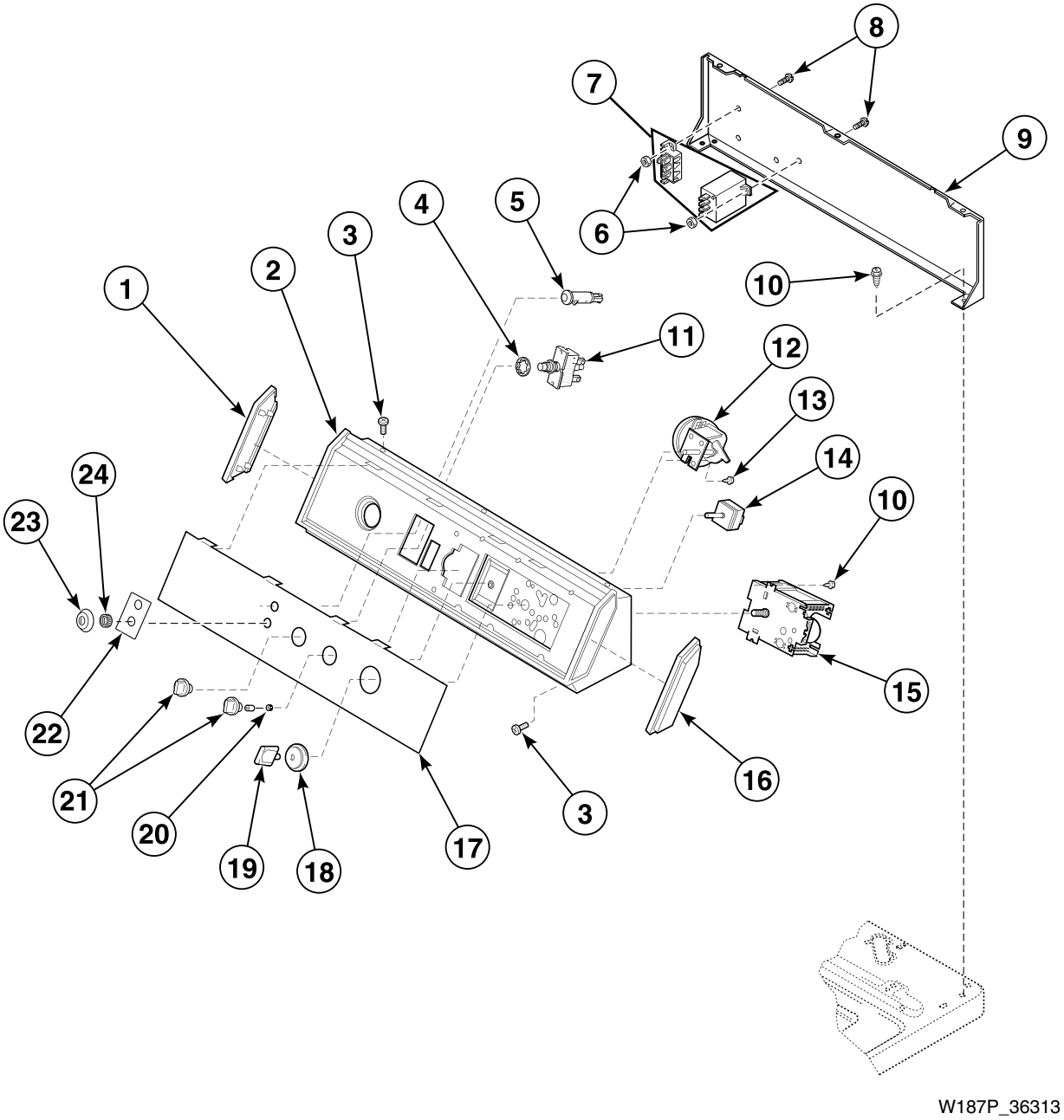

© Copyright, Alliance Laundry Systems LLC – DO NOT COPY or TRANSMIT

Graphic Panel, Control Hood and Controls (Drawing 6 of 12)

REF	PART NO.	DESCRIPTION	COMMENTS
1	31249	End Cap	Left
2	31811	Hood and Mounting Bracket Assembly	Models through Serial No. 9511021616
	N/A	Control Hood Assembly	Models starting Serial No. 9511021617
3	31752	Screw	
4	25820	Washer	
5	39536	Lid Switch Indicator Light	
6	02788	Nut	
7	598P3	Electric Lid Lock Kit	
8	N/A	Screw	
9	37782	Hood Back Panel	
10	23962	Screw	
11	55882	Switch Assembly	
12	201927P	Pressure Switch	
13	31260	Screw	
14	21300	Temperature Switch	Models through Serial No. 9511021616
	35115	Temperature Switch	Models starting Serial No. 9511021617
15	31241P	Timer	
16	31248	End Cap	Right
17	N/A	Graphic Panel	
18	33817	Timer Skirt Assembly	
19	33897	Timer Knob	
20	57584	Nut	
21	N/A	Knob Assembly	
22	N/A	Switch Plate	
23	N/A	Switch Collar	
24	24206	Nut	

*** Add Letter To Designate Color. H - Harvest Gold L - Almond W - White**
N/A = Part no longer available

© Copyright, Alliance Laundry Systems LLC – DO NOT COPY or TRANSMIT

Graphic Panel, Control Hood and Controls (Drawing 7 of 12)

Models AWM393*23069 and ZWM373*-3069

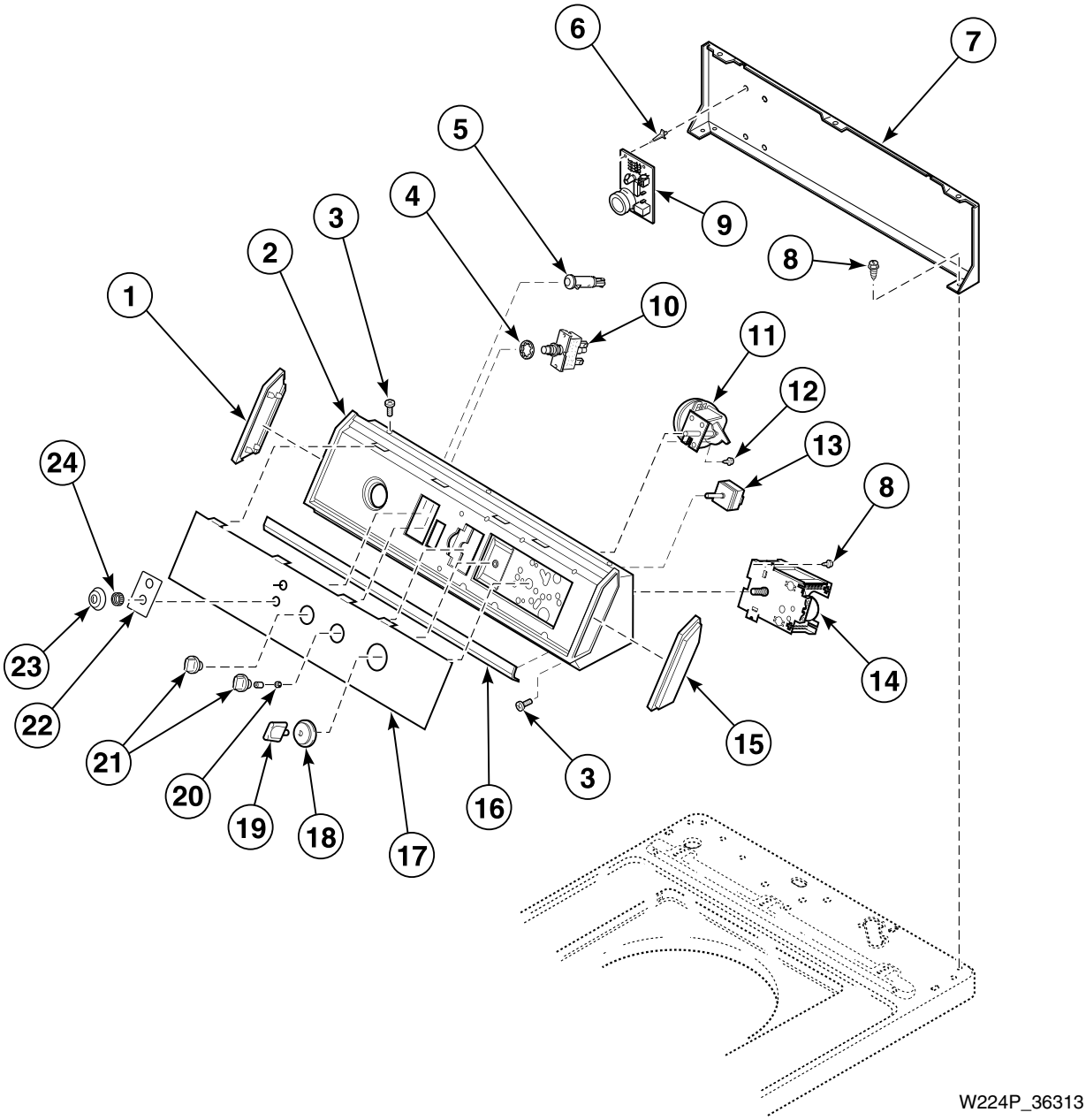

© Copyright, Alliance Laundry Systems LLC – DO NOT COPY or TRANSMIT

Graphic Panel, Control Hood and Controls (Drawing 7 of 12)

REF	PART NO.	DESCRIPTION	COMMENTS
1	31249	End Cap	Left
2	31811	Hood and Mounting Bracket Assembly	Model AWM393*23069 through Serial No. 9511021616
	N/A	Control Hood Assembly	Model AWM393*23069 starting Serial No. 9511021617
	N/A	Hood and Mounting Plate Assembly	Model ZWM373*-3069 through Serial No. 9511021616
	37845	Control Hood Assembly	Model ZWM373*-3069 starting Serial No. 9511021617
3	31752	Screw	Use with black control hood
	32993	Screw	Use with gray control hood
4	25820	Washer	
5	39536	Lid Switch Indicator Light	
6	501523	Circuit Board Support	
7	37782	Hood Back Panel	
8	23962	Screw	
9	37225P	Control Lid Lock Assembly	
10	55882	Switch Assembly	
11	201927P	Pressure Switch	
12	31260	Screw	
13	21300	Temperature Switch	Models through Serial No. 9511021616
	35115	Temperature Switch	Models starting Serial No. 9511021617
14	31241P	Timer	
15	31248	End Cap	Right
16	33123R	Trim	
17	N/A	Graphic Panel	
18	33817	Timer Skirt Assembly	
19	33897	Timer Knob	Model AWM393*23069
	33898W	Timer Knob	Model ZWM373*-3069
20	57584	Nut	Use with 21300 Temperature Switch
21	N/A	Knob Assembly	Model AWM393*23069
	33688	Knob Assembly	Model ZWM373*-3069
22	N/A	Switch Plate	
23	N/A	Switch Collar	
24	24206	Nut	

*** Add Letter To Designate Color. H - Harvest Gold L - Almond W - White**

N/A = Part no longer available

© Copyright, Alliance Laundry Systems LLC – DO NOT COPY or TRANSMIT

Graphic Panel, Control Hood and Controls (Drawing 8 of 12)

Models ZWM372*-3059 and ZWM373*-3059

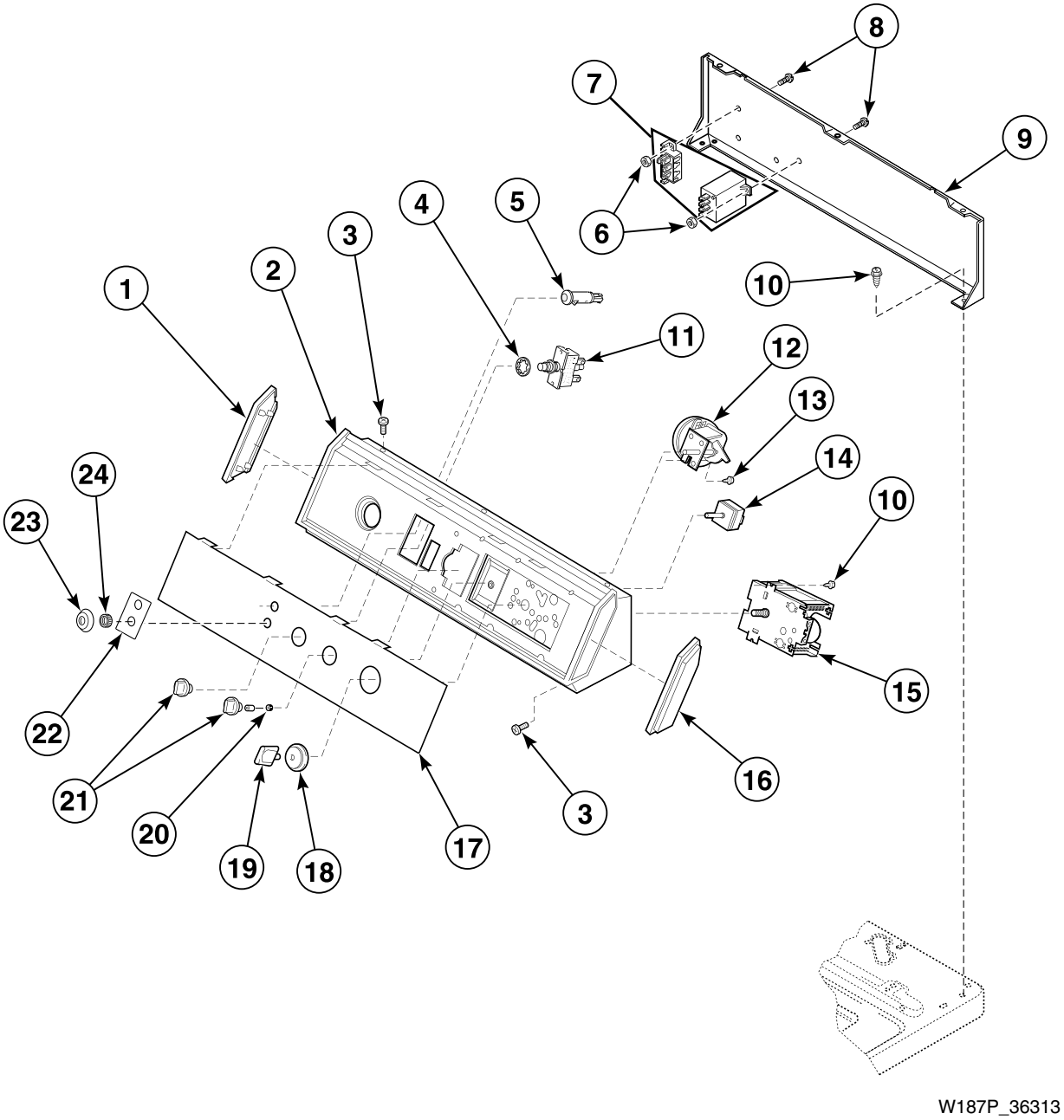

© Copyright, Alliance Laundry Systems LLC – DO NOT COPY or TRANSMIT

Graphic Panel, Control Hood and Controls (Drawing 8 of 12)

REF	PART NO.	DESCRIPTION	COMMENTS
1	31249	End Cap	Left
2	N/A	Hood and Mounting Plate Assembly	Models through Serial No. 9511021616
	37845	Control Hood Assembly	Models starting Serial No. 9511021617
3	32993	Screw	
4	25820	Washer	
5	39536	Lid Switch Indicator Light	
6	02788	Nut	
7	598P3	Electric Lid Lock Kit	
8	N/A	Screw	
9	37782	Hood Back Panel	
10	23962	Screw	
11	55882	Switch Assembly	
12	201927P	Pressure Switch	
13	31260	Screw	
14	21300	Temperature Switch	Models through Serial No. 9511021616
	35115	Temperature Switch	Models starting Serial No. 9511021617
15	31241P	Timer	
16	31248	End Cap	Right
17	N/A	Graphic Panel	
18	33817	Timer Skirt Assembly	
19	33898W	Timer Knob	
20	57584	Nut	Use with 21300 Temperature Switch
21	33688	Knob Assembly	
22	N/A	Switch Plate	
23	N/A	Switch Collar	
24	24206	Nut	

*** Add Letter To Designate Color. H - Harvest Gold L - Almond W - White**
N/A = Part no longer available

© Copyright, Alliance Laundry Systems LLC – DO NOT COPY or TRANSMIT

Graphic Panel, Control Hood and Controls (Drawing 9 of 12)

Models KAW693*-3050 and PA9693*-2200

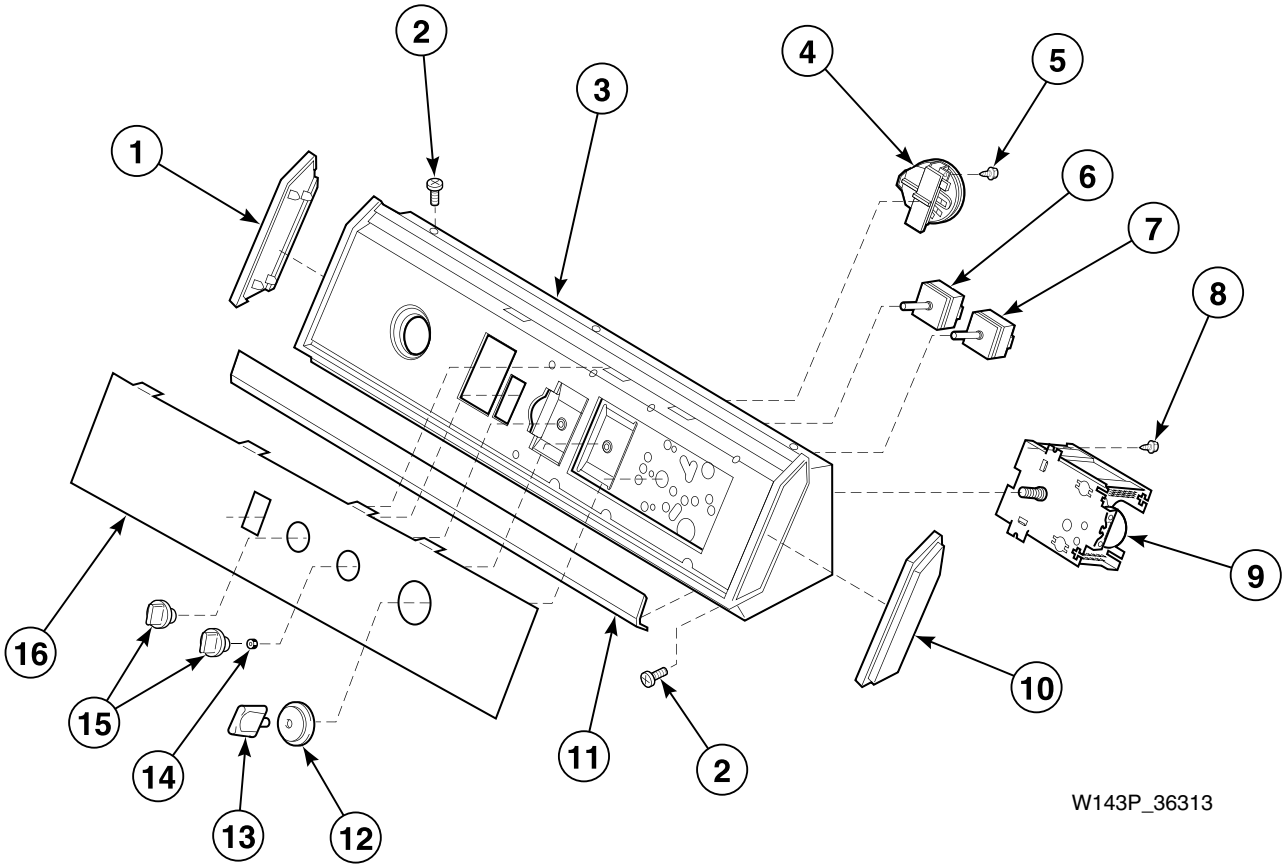

© Copyright, Alliance Laundry Systems LLC – DO NOT COPY or TRANSMIT

Graphic Panel, Control Hood and Controls (Drawing 9 of 12)

REF	PART NO.	DESCRIPTION	COMMENTS
1	34460	End Cap	Left; Model KAW693*-3050
	31249	End Cap	Left; Model PA9693*-2200
2	31752	Screw	
3	31735	Control Hood Assembly	Model KAW693*-3050 through Serial No. 9511021616
	37843	Control Hood Assembly	Model KAW693*-3050 starting Serial No. 9511021617
	N/A	Control Hood Assembly	Model PA9693*-2200
4	36251	Pressure Switch	
5	31260	Screw	
6	N/A	Temperature Switch	Models through Serial No. 9511021616
	35117	Temperature Switch	Models starting Serial No. 9511021617
7	N/A	Selector Switch	
8	23962	Screw	
9	35785P	Timer	Model KAW693*-3050
	31240P	Timer	Model PA9693*-2200
10	34459	End Cap	Right; Model KAW693*-3050
	31248	End Cap	Right; Model PA9693*-2200
11	33123R	Trim	
12	33817	Timer Skirt Assembly	
13	33897	Timer Knob	
14	57584	Nut	
15	N/A	Knob Assembly	
16	N/A	Graphic Panel	

*** Add Letter To Designate Color. H - Harvest Gold L - Almond W - White**

N/A = Part no longer available

© Copyright, Alliance Laundry Systems LLC – DO NOT COPY or TRANSMIT

Graphic Panel, Control Mounting Plate and Controls (Drawing 1 of 2)

Models KAW393*-3050, RWM274*-3062, RWM372*-3062 and RWM373*-3062

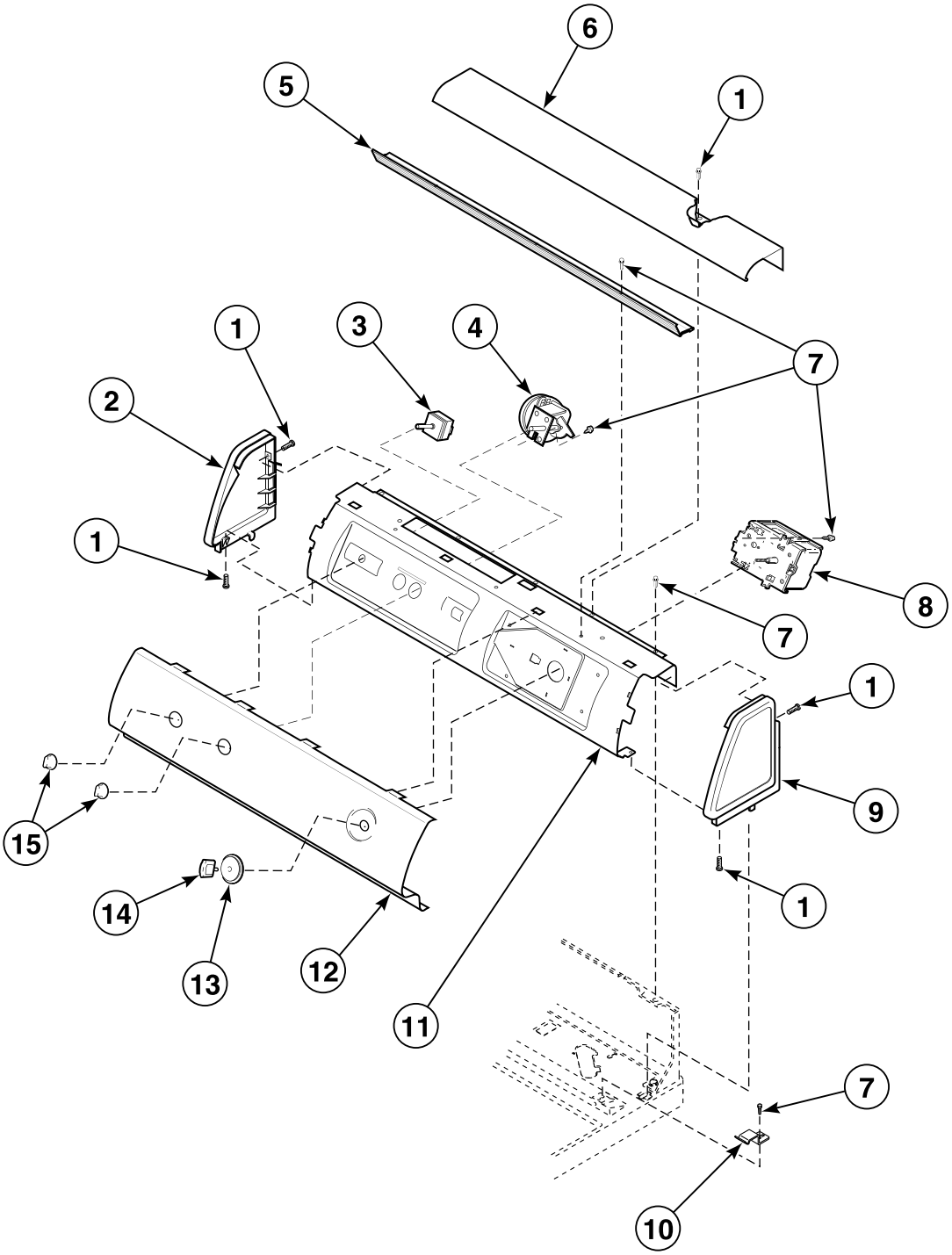

W018B_36313

© Copyright, Alliance Laundry Systems LLC – DO NOT COPY or TRANSMIT

Graphic Panel, Control Mounting Plate and Controls (Drawing 1 of 2)

REF	PART NO.	DESCRIPTION	COMMENTS
1	501086	Screw	
2	504009WP	End Panel	White; Left
	504009L	End Panel	Almond; Left
3	35117	Temperature Switch	Model KAW393*-3050
	35115	Temperature Switch	All other models
4	201927P	Pressure Switch	
5	34826	Lamp Diffuser	
6	34824W	Top Cover	White
	34824L	Top Cover	Almond
7	23962	Screw	
8	201013P	Timer	Models KAW393*-3050 and RWM373*-3062
	37995P	Timer	All other models
9	504008WP	End Panel	White; Right
	504008L	End Panel	Almond; Right
10	35358	Hold-Down Clip	
11	38171	Control Support Panel	
12	38360P	Graphic Panel	Model KAW393*-3050
	38071	Graphic Panel	Model RWM274*-3062
	38072	Graphic Panel	Models RWM372*-3062 and RWM373*-3062
13	36700W	Timer Skirt Assembly	White
	36700L	Timer Skirt Assembly	Almond
14	201501W	Timer Knob	
15	36701W	Knob Assembly	White
	36701L	Knob Assembly	Almond

*** Add Letter To Designate Color. H - Harvest Gold L - Almond W - White**

© Copyright, Alliance Laundry Systems LLC – DO NOT COPY or TRANSMIT

Graphic Panel, Control Mounting Plate and Controls (Drawing 2 of 2)

Models KAW793*-3050 and AWM251*-99E7

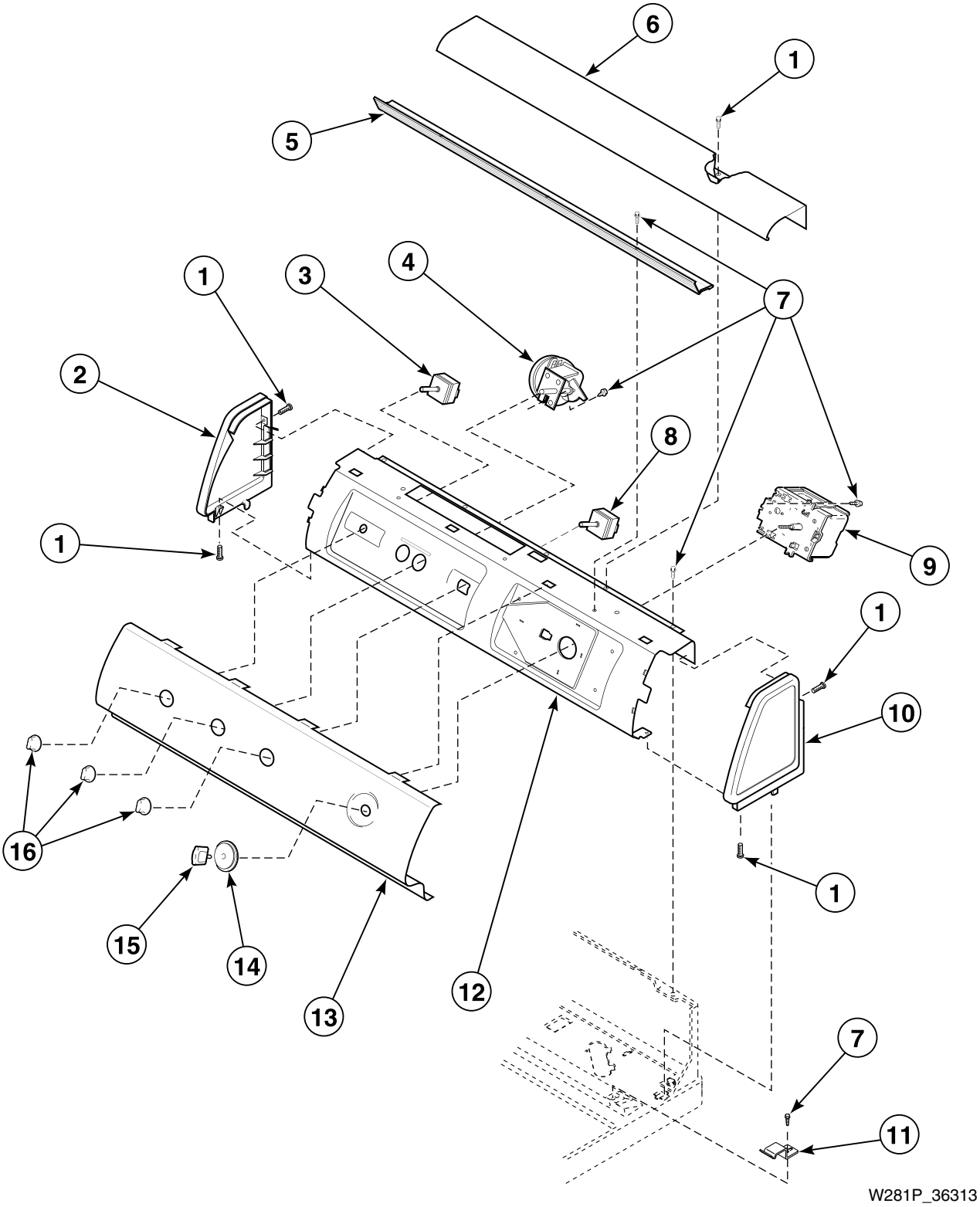

© Copyright, Alliance Laundry Systems LLC – DO NOT COPY or TRANSMIT

Graphic Panel, Control Mounting Plate and Controls (Drawing 2 of 2)

REF	PART NO.	DESCRIPTION	COMMENTS
1	501086	Screw	
2	504009WP	End Panel	White; Left; Model KAW793*-3050
	504009L	End Panel	Almond; Left; Model KAW793*-3050
	N/A	End Panel	Left; Model AWM251*-99E7
3	35117	Temperature Switch	Model KAW793*-3050
4	201927P	Pressure Switch	Model KAW793*-3050
	N/A	Pressure Switch	Model AWM251*-99E7
5	34826	Lamp Diffuser	
6	34824W	Top Cover	White; Model KAW793*-3050
	34824L	Top Cover	Almond; Model KAW793*-3050
	N/A	Top Cover	Model AWM251*-99E7
7	23962	Screw	
8	36951	Option Switch	Model KAW793*-3050
9	37004P	Timer	Model KAW793*-3050
	31238P	Timer	Model AWM251*-99E7
10	504008WP	End Panel	White; Right; Model KAW793*-3050
	504008L	End Panel	Almond; Right; Model KAW793*-3050
	N/A	End Panel	Right; Model AWM251*-99E7
11	35358	Hold-Down Clip	
12	38171	Control Support Panel	
13	37002WP	Graphic Panel	Model KAW793*-3050
	N/A	Graphic Panel	Model AWM251*-99E7
14	36700W	Timer Skirt Assembly	White; Model KAW793*-3050
	36700L	Timer Skirt Assembly	Almond; Model KAW793*-3050
	33817	Timer Skirt Assembly	Model AWM251*-99E7
15	201501W	Timer Knob	Model KAW793*-3050
	33897	Timer Knob	Model AWM251*-99E7
16	36701W	Knob Assembly	White; Model KAW793*-3050
	36701L	Knob Assembly	Almond; Model KAW793*-3050

*** Add Letter To Designate Color. H - Harvest Gold L - Almond W - White**
N/A = Part no longer available

© Copyright, Alliance Laundry Systems LLC – DO NOT COPY or TRANSMIT

Graphic Panel, Control Hood and Controls (Drawing 10 of 12)

Model SWM190*

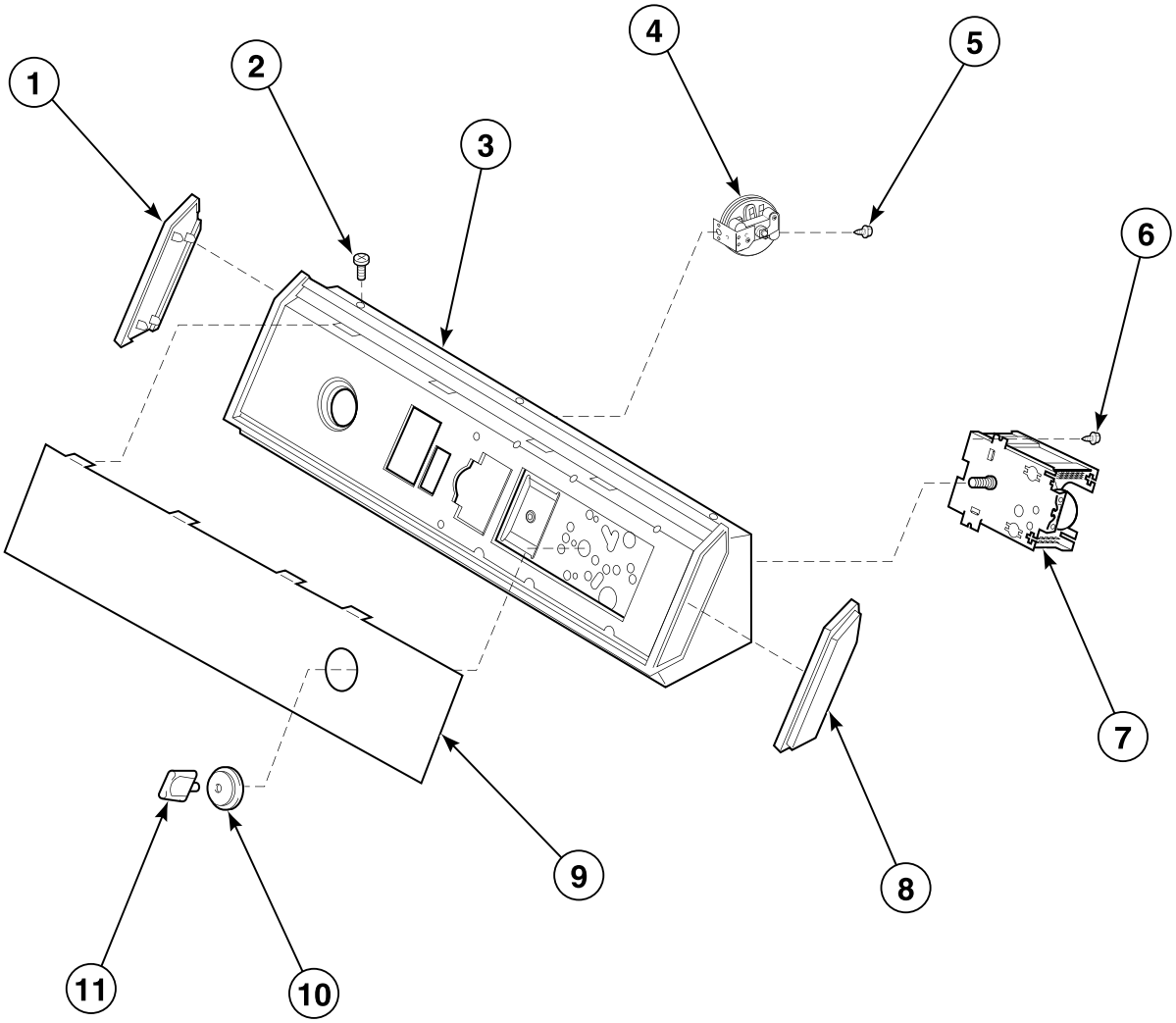

W170P_36313

© Copyright, Alliance Laundry Systems LLC – DO NOT COPY or TRANSMIT

Graphic Panel, Control Hood and Controls (Drawing 10 of 12)

REF	PART NO.	DESCRIPTION	COMMENTS
1	34460	End Cap	Left
2	31752	Screw	
3	31811	Hood and Mounting Bracket Assembly	Models through Serial No. 9511021616
	N/A	Control Hood Assembly	Models starting Serial No. 9511021617
4	N/A	Pressure Switch	
5	31260	Screw	
6	23962	Screw	
7	31238P	Timer	
8	34459	End Cap	Right
9	N/A	Graphic Panel	
10	33817	Timer Skirt Assembly	
11	33897	Timer Knob	

*** Add Letter To Designate Color. H - Harvest Gold L - Almond W - White**

N/A = Part no longer available

© Copyright, Alliance Laundry Systems LLC – DO NOT COPY or TRANSMIT

Graphic Panel, Control Hood and Controls (Drawing 11 of 12)

Model UWE993*-1102

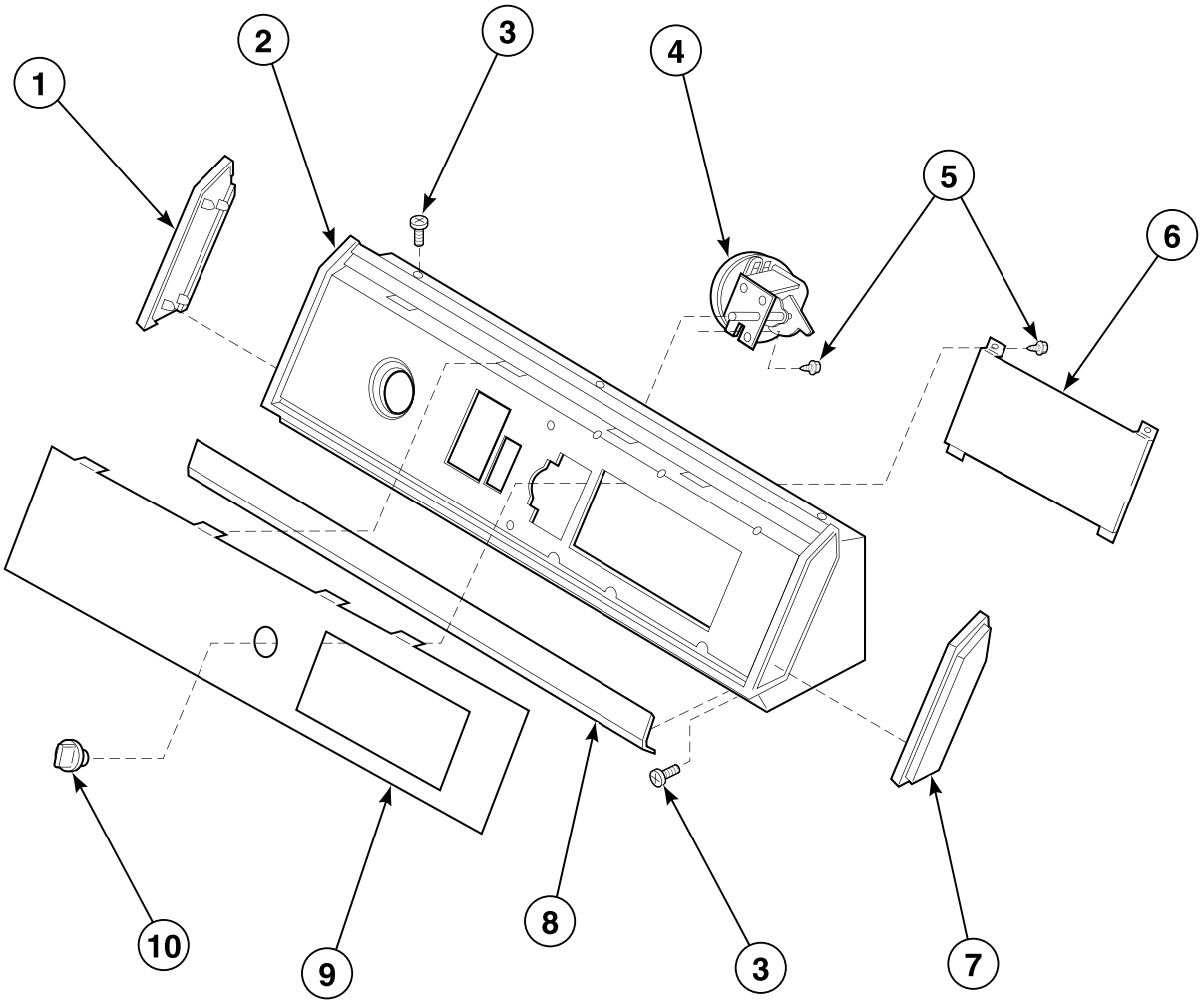

W188P_36313

© Copyright, Alliance Laundry Systems LLC – DO NOT COPY or TRANSMIT

Graphic Panel, Control Hood and Controls (Drawing 11 of 12)

REF	PART NO.	DESCRIPTION	COMMENTS
1	31249	End Cap	Left
2	31224	Control Hood	
3	31752	Screw	
4	201927P	Pressure Switch	
5	31260	Screw	
6	N/A	Electronic Control Assembly	
7	31248	End Cap	Right
8	33123R	Trim	
9	N/A	Graphic Panel	
10	N/A	Knob Assembly	

*** Add Letter To Designate Color. H - Harvest Gold L - Almond W - White**
N/A = Part no longer available

© Copyright, Alliance Laundry Systems LLC – DO NOT COPY or TRANSMIT

Graphic Panel, Control Hood and Controls (Drawing 12 of 12)

Models UWM392*-1102 and UWM593*-1102

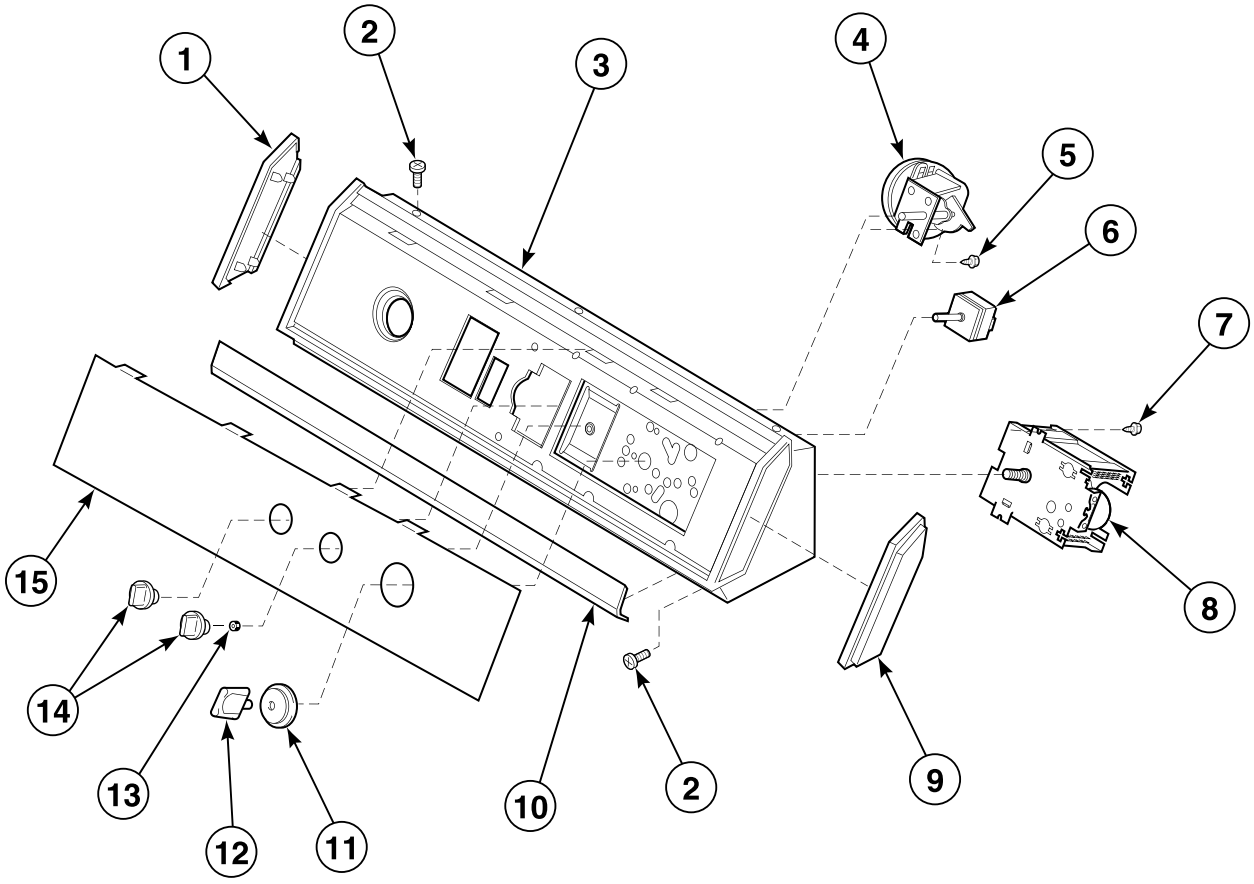

W172P_36313

© Copyright, Alliance Laundry Systems LLC – DO NOT COPY or TRANSMIT

Graphic Panel, Control Hood and Controls (Drawing 12 of 12)

REF	PART NO.	DESCRIPTION	COMMENTS
1	31249	End Cap	Left
2	31752	Screw	
3	31811	Hood and Mounting Bracket Assembly	Models through Serial No. 9511021616
	N/A	Control Hood Assembly	Models starting Serial No. 9511021617
4	201927P	Pressure Switch	
5	31260	Screw	
6	21300	Temperature Switch	Model UWM392*-1102 through Serial No. 9511021616
	35115	Temperature Switch	Model UWM392*-1102 starting Serial No. 9511021617
	32189	Water Temperature Switch	Model UWM593*-1102 through Serial No. 9511021616
	36335	Temperature Switch	Model UWM593*-1102 starting Serial No. 9511021617
7	23962	Screw	
8	31239P	Timer	Model UWM392*-1102
	32039P	Timer	Model UWM593*-1102
9	31248	End Cap	Right
10	33123R	Trim	Model UWM593*-1102
11	33817	Timer Skirt Assembly	
12	33897	Timer Knob	
13	57584	Nut	Use with 21300 Temperature Switch and 32189 Water Temperature Switch
14	N/A	Knob Assembly	
15	N/A	Graphic Panel	

*** Add Letter To Designate Color. H - Harvest Gold L - Almond W - White**

N/A = Part no longer available

© Copyright, Alliance Laundry Systems LLC – DO NOT COPY or TRANSMIT

Out-of-Balance Switch

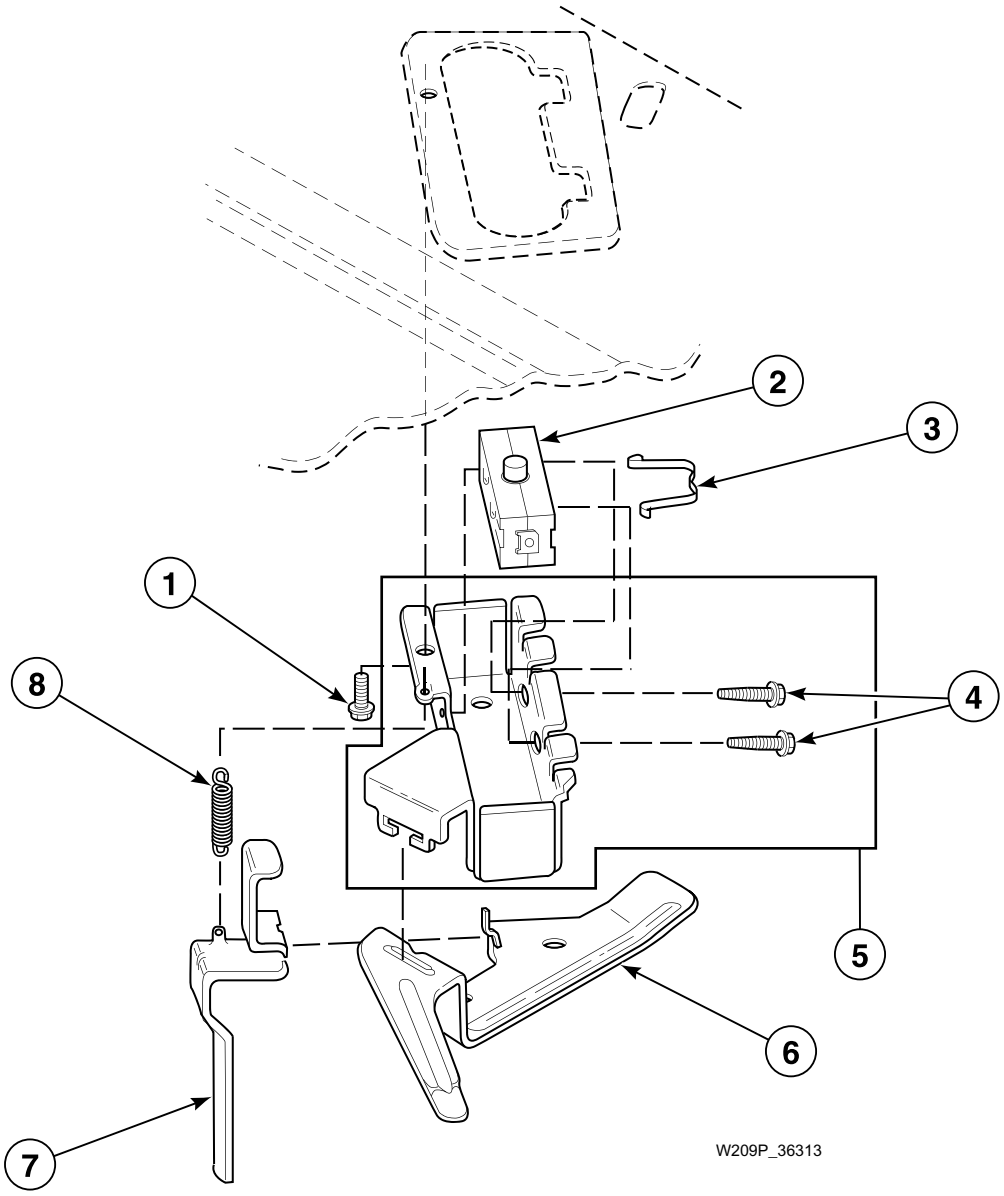

© Copyright, Alliance Laundry Systems LLC – DO NOT COPY or TRANSMIT

Out-of-Balance Switch

REF	PART NO.	DESCRIPTION	COMMENTS
1	23962	Screw	
2	33445	Switch	
3	33433	Switch Holder Clip	
4	36510	Screw	
5	36497P	Switch Holder Kit	Includes item 4
6	33441	Actuator Arm	
7	33442	Unbalanced Load Lever	
8	33443	Spring	

© Copyright, Alliance Laundry Systems LLC – DO NOT COPY or TRANSMIT

Cabinet Top and Loading Door

Models AWM393*-3059, AWM393*23059, AWM393*23069, NWM393*-3059, ZWM372*-3059, ZWM373*-3059 and ZWM373*-3069

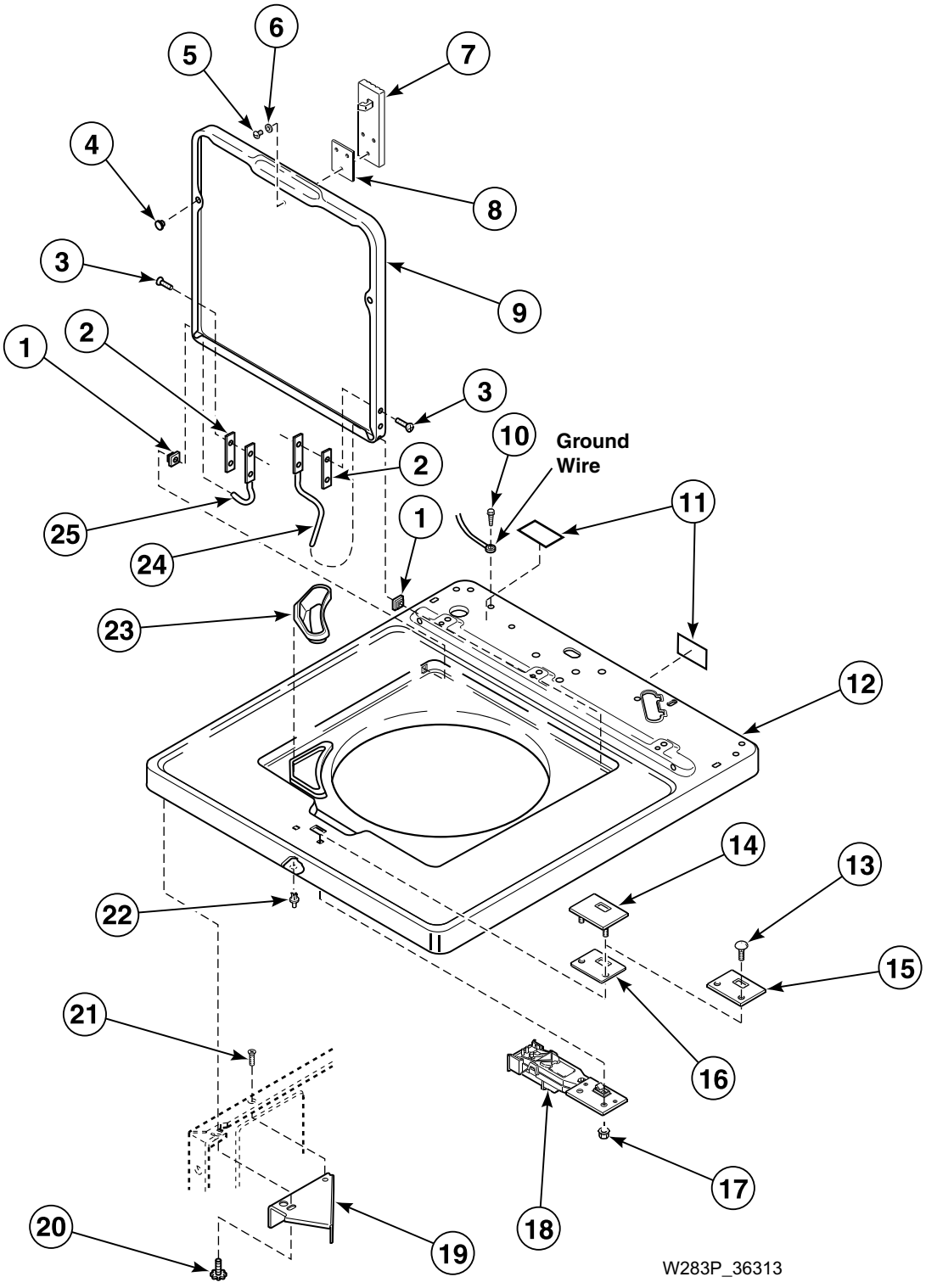

© Copyright, Alliance Laundry Systems LLC – DO NOT COPY or TRANSMIT

Cabinet Top and Loading Door

REF	PART NO.	DESCRIPTION	COMMENTS
1	33446	Bushing	
2	34338	Hinge Gasket	
3	34337	Screw	
4	21685	Bumper	
5	Q6695	Screw	
6	21643	Washer	
7	837P3	Lid Lock Kit	
8	29677	Door Latch Gasket	
9	33552W	Lid	White; Models AWM393*23069 and ZWM373*-3069
	33552L	Lid	Almond; Models AWM393*23069 and ZWM373*-3069
	N/A	Loading Door	All other models
10	52909	Screw	
11	36592	Warning Sticker	Models AWM393*23069 and ZWM373*-3069
	505281	Disconnect Power Warning Label	All other models
12	N/A	Cabinet Top	
13	32184	Bolt	
14	29676	Switch Mounting Plate	Models through Serial No. 961026055
15	37828P	Cover Plate	Models starting Serial No. 961026056
16	30378	Lid Lock Gasket	
17	22001	Nut	
18	837P3	Lid Lock Kit	
19	36034	Director Bracket	
20	33562	Screw	
21	N/A	Screw	
22	56534	Support Barrel	
23	34776	Bleach Dispenser	
24	36437	Lid Hinge	Right
25	36438	Lid Hinge	Left

*** Add Letter To Designate Color. H - Harvest Gold L - Almond W - White**
N/A = Part no longer available

© Copyright, Alliance Laundry Systems LLC – DO NOT COPY or TRANSMIT

Cabinet Top, Loading Door and Control Hood Rear Panel

All Models Except AWM393*-3059, AWM393*23059, AWM393*23069, NWM393*-3059, ZWM372*-3059, ZWM373*-3059 and ZWM373*-3069

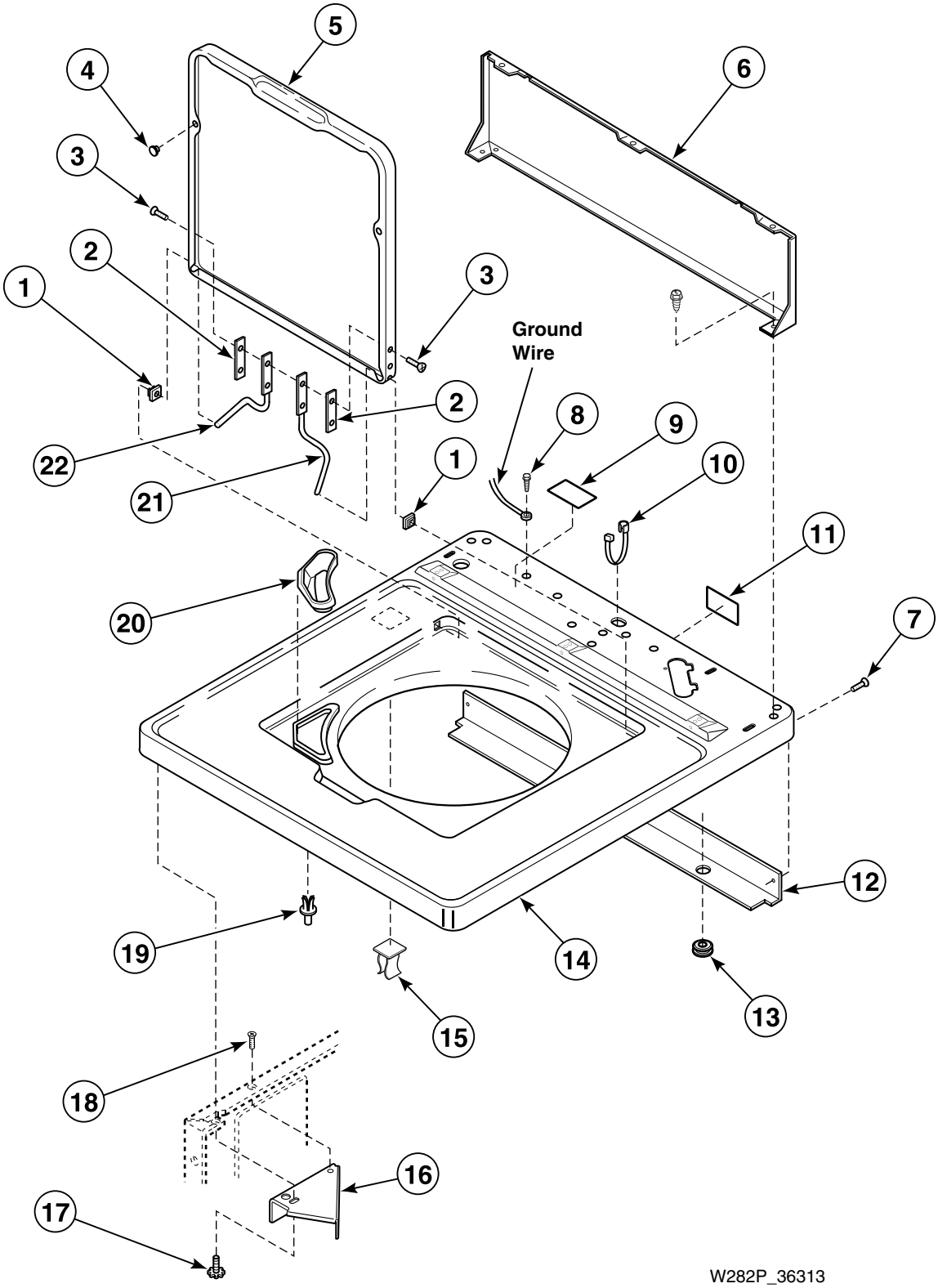

© Copyright, Alliance Laundry Systems LLC – DO NOT COPY or TRANSMIT

Cabinet Top, Loading Door and Control Hood Rear Panel

REF	PART NO.	DESCRIPTION	COMMENTS
1	33446	Bushing	
2	34338	Hinge Gasket	
3	34337	Screw	
4	21685	Bumper	
5	N/A	Lid	Models KWM372*-1109, KWM472*-1109 and KWM573*-1109
	34199WP	Lid	Model UWE993*-1102
	33541WP	Lid	White; All other models
	33541LP	Lid	Almond; All other models
6	37782	Hood Back Panel	
7	23962	Screw	
8	52909	Screw	
9	505281	Disconnect Power Warning Label	
10	N/A	Strain Relief	Models AWM270*-3062, AWM372*-3062, AWM373*-3062, AWM392*-3000, AWM392*-3300, AWM392*23000, AWM392*23300, AWM393*-3000, AWM393*-3300, AWM393*23000, AWM393*23300, RWM274*-3062, RWM372*-3062, RWM373*-3062 and SWM190*
	38384	Strain Relief	All other models
11	500316	Warning Label	Models KWM372*-1109, KWM373*-1109, KWM472*-1109, KWM573*-1109, UWE993*-1102, UWM392*-1102 and UWM593*-1102
	505281	Disconnect Power Warning Label	All other models
12	39744	Top Shield	
13	80262	Grommet	
14	34902WP	Top Assembly	White
	34902LP	Top Assembly	Almond
15	36519	Hinge Stop Clip	Models KAW393*-3050 and KAW793*-3050
16	36034	Director Bracket	
17	33562	Screw	
18	N/A	Screw	
19	56534	Support Barrel	
20	34776	Bleach Dispenser	
21	36437	Lid Hinge	Right
22	36513	Lid Hinge	Left; Models KAW393*-3050 and KAW793*-3050
	36438	Lid Hinge	Left; All other models

*** Add Letter To Designate Color. H - Harvest Gold L - Almond W - White**

N/A = Part no longer available

© Copyright, Alliance Laundry Systems LLC – DO NOT COPY or TRANSMIT

Inlet Hose, Fill Hose and Mixing Valve Mounting Bracket

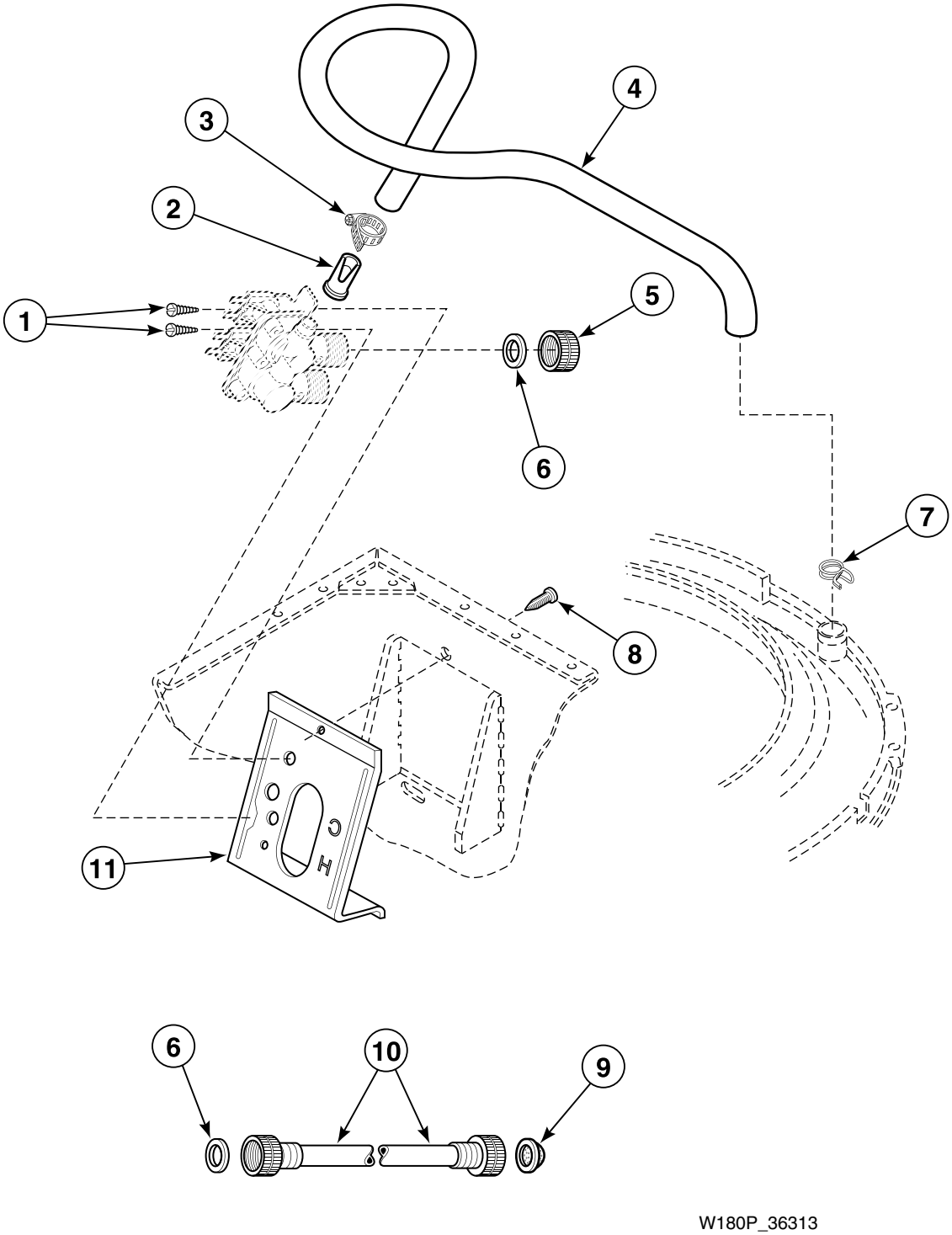

© Copyright, Alliance Laundry Systems LLC – DO NOT COPY or TRANSMIT

Inlet Hose, Fill Hose and Mixing Valve Mounting Bracket

REF	PART NO.	DESCRIPTION	COMMENTS
1	501086	Screw	
2	34500	Backflow Preventer	
3	36801	Hose Clamp	
4	38155	Mixing Valve-to-Tub Cover Hose	
5	24145	Cap	Use to cap off the hot water side of the mixing valve on certain models
6	20290	Washer	
7	29210	Hose Clamp	
8	33562	Screw	
9	N/A	Filter Washer	
10	35385	Fill Hose	4 feet; Models KAW393*-3050, KAW693*-3050 and KAW793*-3050
	38349P	Fill Hose Kit	4 feet; Includes item 6; Models AWM251*-99E7, AWM270*-3062, AWM372*-3062, AWM373*-3062, AWM392*-3000, AWM393*-3000, AWM393*-3050, AWM393*-3059, AWM392*23000, AWM393*23000, AWM393*23050, AWM393*23059, AWM393*23069, NWM393*-3059, RWM274*-3062, RWM372*-3062, RWM373*-3062, SWM190*, ZWM372*-3059, ZWM373*-3059 and ZWM373*-3069
	28330P	Fill Hose Kit	4 feet; Includes item 6; All other models
	37380	Fill Hose	8 feet; Optional; Hose is equipped with 1 metric and 1 standard hose coupling
	37381	Fill Hose	10 feet; Optional; Hose is equipped with 1 metric and 1 standard hose coupling
11	39407	Mixing Valve Mounting Bracket	

*** Add Letter To Designate Color. H - Harvest Gold L - Almond W - White**

N/A = Part no longer available

© Copyright, Alliance Laundry Systems LLC – DO NOT COPY or TRANSMIT

Mixing Valve Assembly

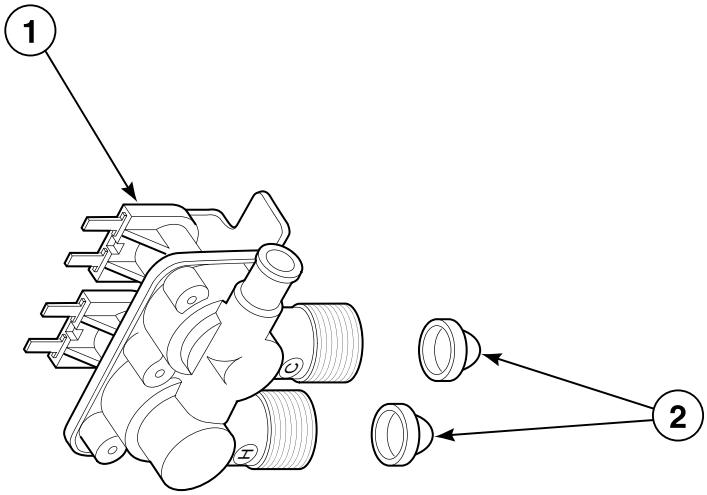

W284P_36313

© Copyright, Alliance Laundry Systems LLC – DO NOT COPY or TRANSMIT

Mixing Valve Assembly

REF	PART NO.	DESCRIPTION	COMMENTS
	34963A	Mixing Valve Coil	Use with 34963 Mixing Valve
	33930A	Mixing Valve Solenoid	Use with 33930 Mixing Valve
1	35856P	Mixing Valve	Models AWM270*-3062, AWM372*-3062, AWM373*-3062, AWM393*-3050, AWM393*23050, KAW393*-3050, KAW693*-3050, KAW793*-3050, RWM274*-3062, RWM372*-3062 and RWM373*-3062
	N/A	Mixing Valve	Models AWM393*-3059, AWM393*23059, AWM393*23069, NWM393*-3059, ZWM372*-3059, ZWM373*-3059 and ZWM373*-3069; Includes 35745 Restrictor
	34997P	Mixing Valve	Models AWM392*-3000, AWM392*-3300, AWM393*-3000, AWM393*-3300, AWM392*23000, AWM392*23300, AWM393*23000 and AWM393*23300
	33930P	Mixing Valve	Models AWM250*-2200, AWM251*-2200, AWM292*-2200, AWM293*-2200, AWM392*-2200, AWM393*-2200, AWM593*-2200, AWM292*22200, AWM293*22200, AWM392*22200, AWM393*22200, AWM593*22200, PA9392*-2200, PA9393*-2200 and PA9693*-2200
	34963P	Mixing Valve	All other models
2	F270200	Strainer	

*** Add Letter To Designate Color. H - Harvest Gold L - Almond W - White**

N/A = Part no longer available

© Copyright, Alliance Laundry Systems LLC – DO NOT COPY or TRANSMIT

Agitator and Drive Bell

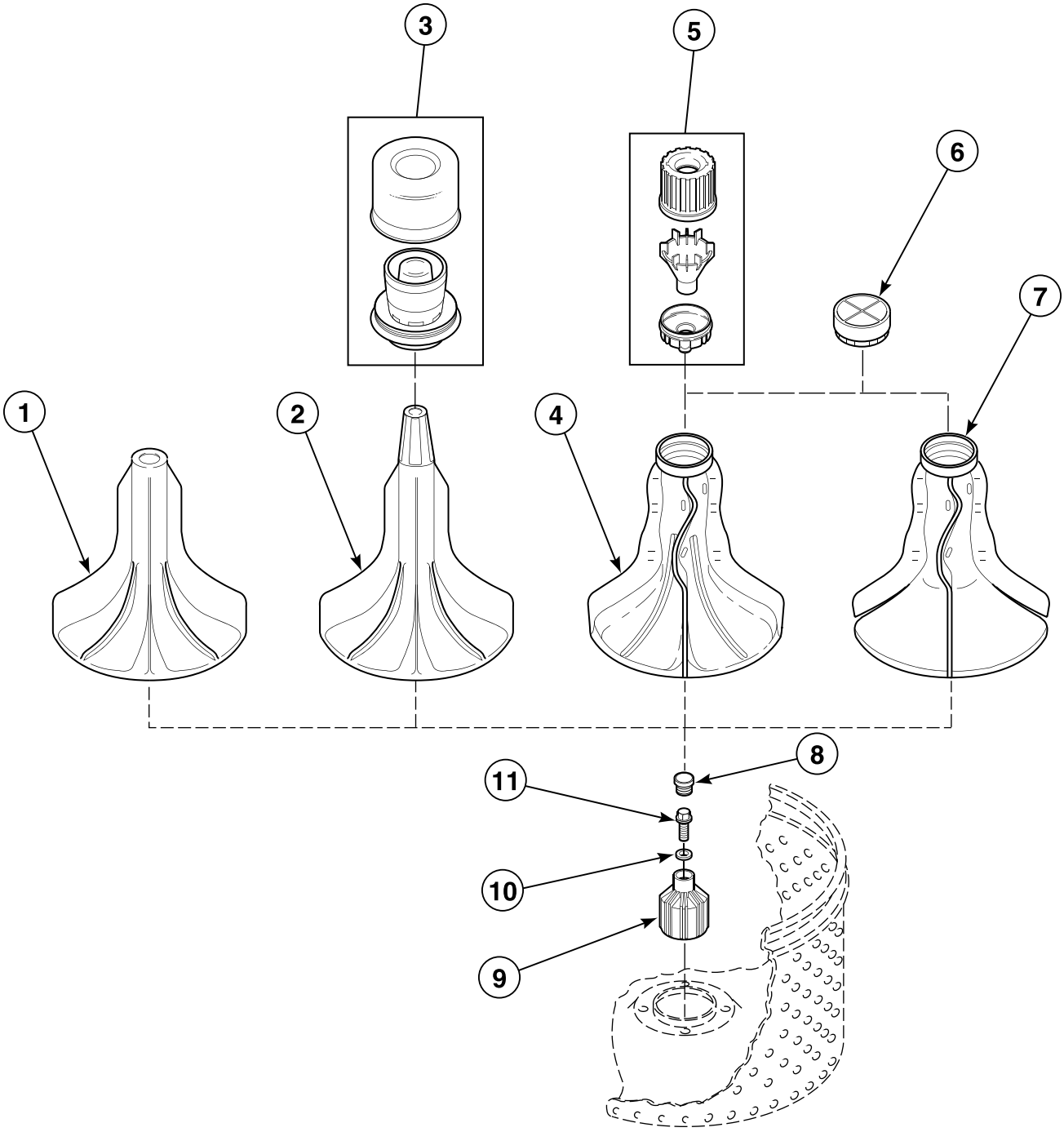

W285P_36313

© Copyright, Alliance Laundry Systems LLC – DO NOT COPY or TRANSMIT

Agitator and Drive Bell

REF	PART NO.	DESCRIPTION	COMMENTS
1	33513	Agitator	Straight vane
2	33514	Agitator	Straight vane
3	33510	Fabric Softener Dispenser Assembly	
4	33174	Agitator	Curved vane
5	36542	Fabric Softener Dispenser Assembly	
6	36515	Agitator Cap	
7	36507	Flex Vane Agitator	
8	36511	Bell Plug	
9	39508P	Drive Bell and Seal Kit	Replaces 36443P Drive Bell and Seal Kit; Includes 29728 Spline Insert (Refer to *Clothes Guard, Washtub, Lint Filter and Hub* section), 36425 Bell and Transmission Tube Seal (Refer to *Clothes Guard, Washtub, Lint Filter and Hub* section), and items 8 and 11
10	36472	O-Ring	
11	39432	Screw	

© Copyright, Alliance Laundry Systems LLC – DO NOT COPY or TRANSMIT

Clothes Guard, Washtub, Lint Filter and Hub

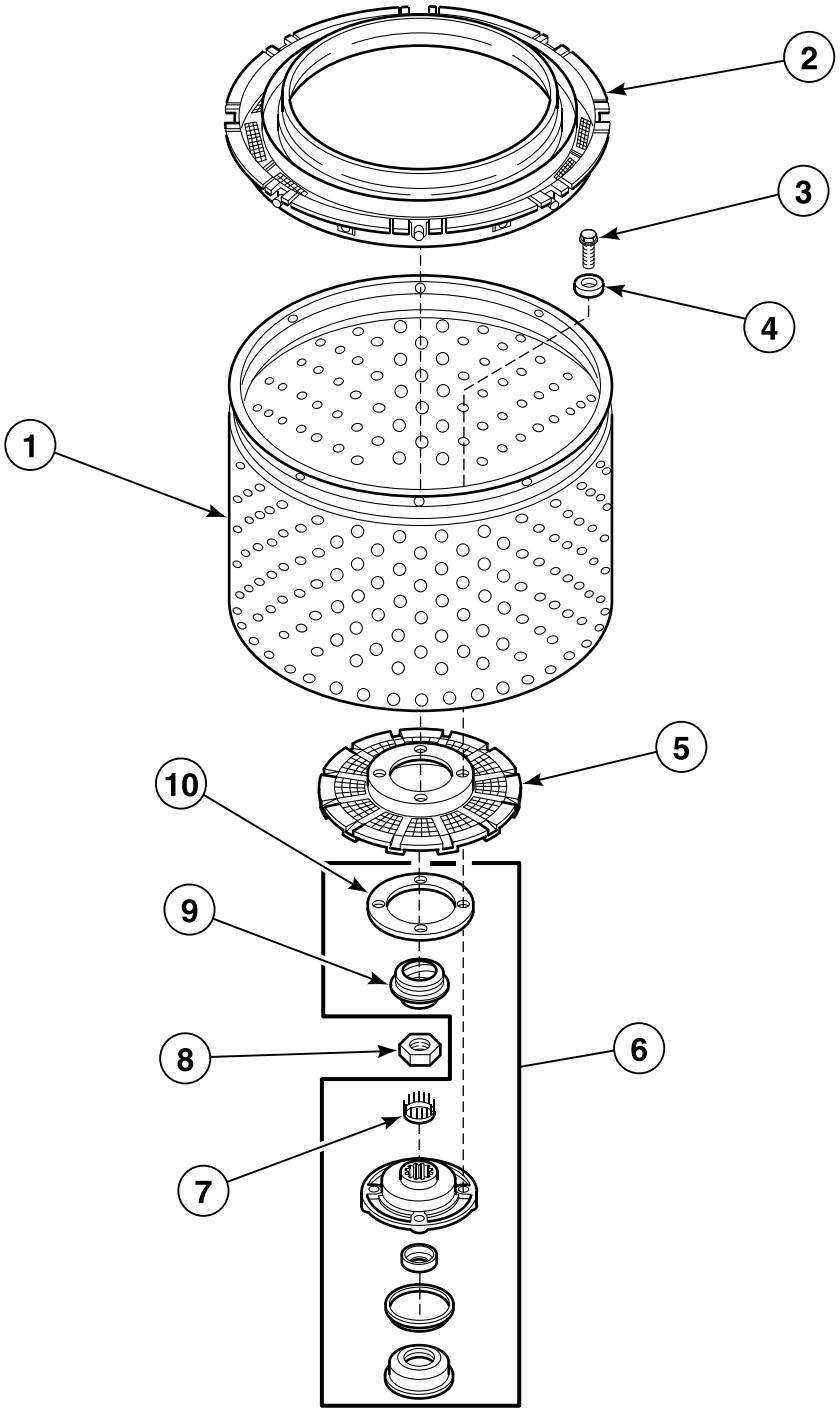

W191P_36313

© Copyright, Alliance Laundry Systems LLC – DO NOT COPY or TRANSMIT

Clothes Guard, Washtub, Lint Filter and Hub

REF	PART NO.	DESCRIPTION	COMMENTS
	36765P	Grease	Use with item 9
1	39252P	Tub Assembly	Blue porcelain; Models AWM250*-2200, AWM270*-3062 and SWM190*
	N/A	Washtub	Blue porcelain; Model RWM274*-3062
	39240P	Tub Assembly	White porcelain
	39387P	Tub Assembly	Stainless steel; Models AWM251*-2200 and AWM251*-99E7
	719P3	Washtub Kit	Stainless steel; All other models
2	35035	Clothes Guard	
3	27202	Screw	
4	28094	Washer	
5	39371	Lint Filter	All models except AWM250*-2200, AWM251*-2200, AWM251*-99E7, AWM270*-3062, AWM372*-3062, AWM373*-3062, KAW393*-3050, KAW693*-3050, KAW793*-3050 and SWM190*
6	495P3A	Hub and Seal Kit	Includes 32857 Tub Cover Gasket and 39508 Drive Bell
7	29728	Spline Insert	
8	29220	Nut	
9	36425	Bell and Transmission Tube Seal	
10	39122	Washtub Gasket	Models AWM250*-2200, AWM251*-2200, AWM251*-99E7, AWM270*-3062, AWM372*-3062, AWM373*-3062, KAW393*-3050, KAW693*-3050, KAW793*-3050 and SWM190*

*** Add Letter To Designate Color. H - Harvest Gold L - Almond W - White**

N/A = Part no longer available

© Copyright, Alliance Laundry Systems LLC – DO NOT COPY or TRANSMIT

Motor, Mounting Bracket, Belt, Pump and Idler Assembly

Washers Equipped with Direct Drive Pump

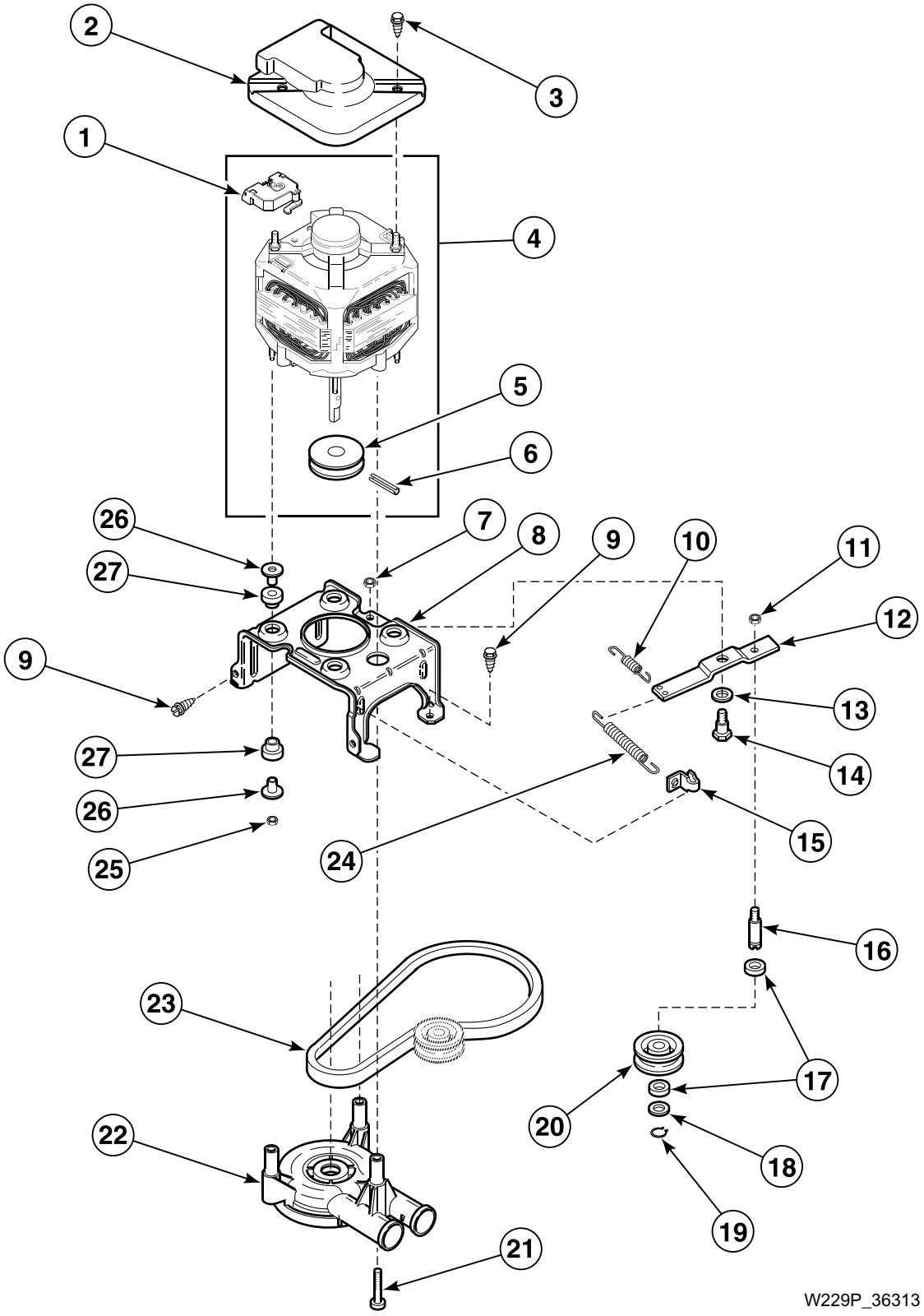

© Copyright, Alliance Laundry Systems LLC – DO NOT COPY or TRANSMIT

Motor, Mounting Bracket, Belt, Pump and Idler Assembly

REF	PART NO.	DESCRIPTION	COMMENTS
	258P3	Capacitor Kit	For use in areas where low voltage exists
1	35632P	Motor Switch	
2	34754	Motor Shield	
3	36639	Screw	
4	36256P	Motor Assembly	Models AWM392*-1000, AWM392*21000, AWM393*-1000, AWM393*21000 and UWM392*-1000; 1 speed; 120 Volt/50 Hertz
	38036P	Motor Kit	Models BWM372*, KWM372*-1109, KWM373*-1109, SWM190* and UWM392*-1102; 1 speed; 115 Volt/60 Hertz
	38035P	Motor Kit	Models AWM250*-2200, AWM251*-2200, AWM251*-99E7, AWM292*-2200, AWM292*22200, AWM293*-2200, AWM293*22200, AWM392*-2200, AWM392*22200, AWM393*-2200, AWM393*22200, PA9392*-2200 and PA9393*-2200; 1 speed; 120 Volt/60 Hertz; Includes capacitor
	201615P	Motor Kit	Models KWM472*-1109, KWM573*-1109, PA9693*-2200, UWE993*-1102 and UWM593*-1102; 2 speed; 115 Volt/60 Hertz
	38034P	Motor Kit	Models AWM593*-2200 and AWM593*22200; 2 speed; 120 Volt/60 Hertz; Includes capacitor
	37543P	Motor Kit	Models KAW693*-3050 and KAW793*-3050; 2 speed; 240 Volt/50 Hertz
	35030P	Motor Assembly	All other models; 1 speed; 240 Volt/50 or 60 Hertz
5	N/A	Motor Pulley	
6	N/A	Roll Pin	
7	52566	Nut	
8	N/A	Motor Mounting Bracket	Models through Serial No. 9502022146
	37415P	Motor Bracket and Idler Lever Kit	Models starting Serial No. 9502022147 and continuing through Serial No. 9507005924
	37415	Motor Mounting Bracket	Models starting Serial No. 9507005925
9	503661	Screw	
10	30620	Idler Lever Helper Spring	Models through Serial No. 9506091526
11	28803	Nut	
12	31054	Idler Lever	Models through Serial No. 9507005924
	37443	Idler Lever	Models starting Serial No. 9507005925
13	81392	Washer	
14	27229	Screw	
15	28849	Spring Clip	
16	28802P	Idler Shaft	
17	29443	Washer	Felt
18	52549	Washer	Nylatron
19	23748	Retaining Ring	
20	28800P	Idler Pulley	
21	34565	Screw	
22	201566P	Pump	
23	28808	Belt	60 Hertz
	35517	Belt	50 Hertz
24	37366	Idler Spring	Models through Serial No. 9507005924
	37606	Idler Lever Spring	Models starting Serial No. 9507005925
25	35423	Nut	
26	34791	Motor Mount Post	
27	34788	Motor Mount	

*** Add Letter To Designate Color. H - Harvest Gold L - Almond W - White**

N/A = Part no longer available

© Copyright, Alliance Laundry Systems LLC – DO NOT COPY or TRANSMIT

Motor, Mounting Bracket, Belts and Idler Assembly

Washers Equipped with Belt Driven Pump or Electric Drain Pump

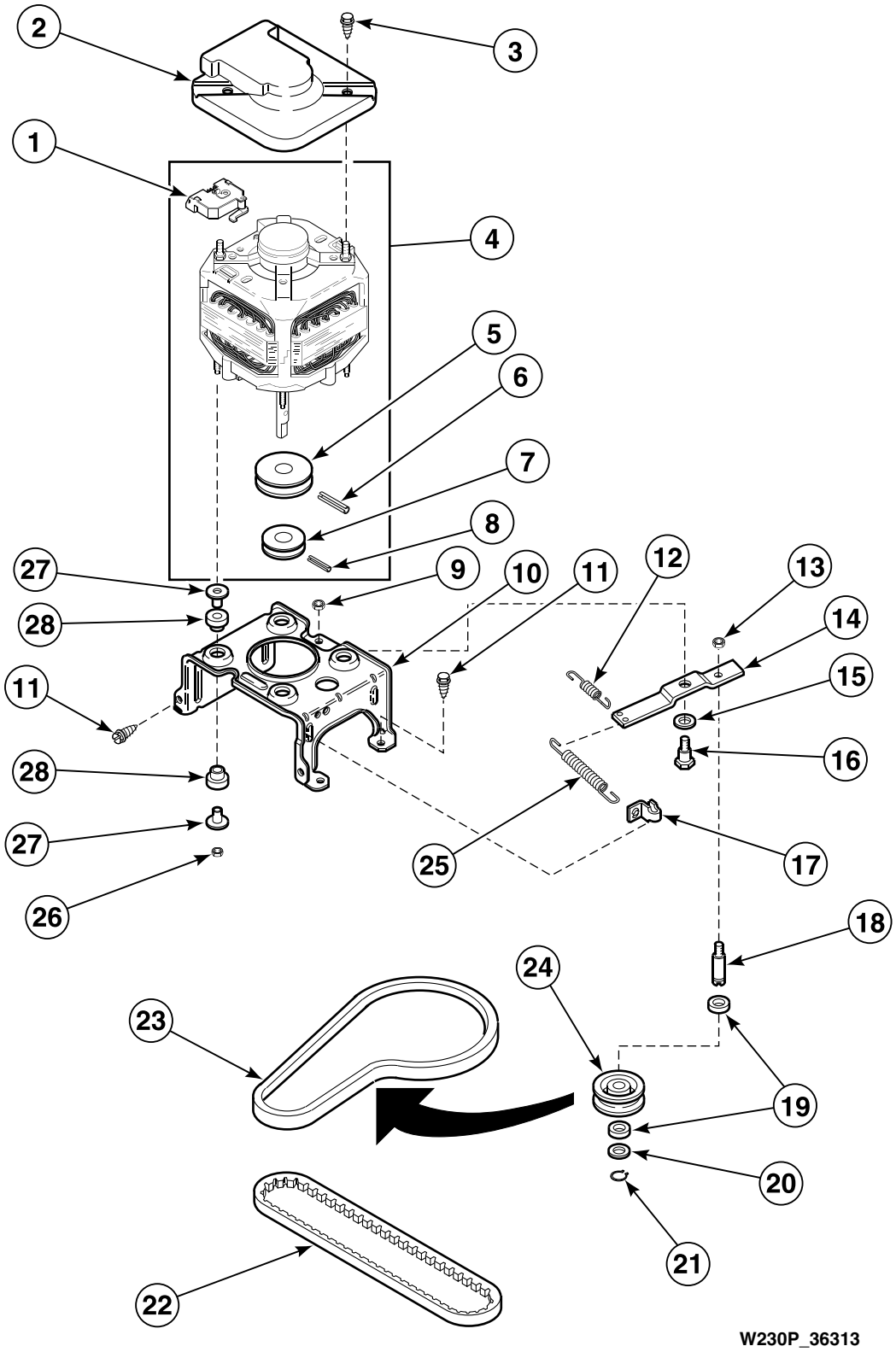

© Copyright, Alliance Laundry Systems LLC – DO NOT COPY or TRANSMIT

Motor, Mounting Bracket, Belts and Idler Assembly

REF	PART NO.	DESCRIPTION	COMMENTS
	258P3	Capacitor Kit	For use in areas where low voltage exists
1	35632P	Motor Switch	
2	35886	Motor Shield	Models AWM251*-99E7, AWM270*-3062, AWM372*-3062, AWM373*-3062, RWM274*-3062, RWM372*-3062, RWM373*-3062 and SWM190*
	34754	Motor Shield	All other models
3	36639	Screw	
4	35559P	Motor Assembly	Models AWM392*-1000, AWM392*21000, AWM393*-1000, AWM393*21000 and UWM392*-1000; 1 speed; 120 Volt/50 Hertz
	35555P	Motor Assembly	Models AWM270*-3062, AWM372*-3062, AWM373*-3062, AWM392*-3000, AWM392*23000, AWM393*-3000, AWM393*-3050, AWM393*-3059, AWM393*23000, AWM393*23050, AWM393*23059, KAW393*-3050, NWM393*-3059, RWM274*-3062, RWM372*-3062, RWM373*-3062, ZWM372*-3059, ZWM373*-3059 and ZWM373*-3069; 1 speed; 240 Volt/50 Hertz; Electric drain pump
	36381P	Motor Assembly	Models KAW693*-3050 and KAW793*-3050; 2 speed; 240 Volt/50 Hertz; Electric drain pump
5	N/A	Motor Pulley	
6	N/A	Roll Pin	
7	N/A	Motor Pulley	Pump
8	28087	Roll Pin	
9	52566	Nut	
10	N/A	Motor Mounting Bracket	Models through Serial No. 9502022146
	37415P	Motor Bracket and Idler Lever Kit	Models starting Serial No. 9502022147 and continuing through Serial No. 9507005924
	37415	Motor Mounting Bracket	Models starting Serial No. 9507005925
11	503661	Screw	
12	30620	Idler Lever Helper Spring	Models through Serial No. 9506091526
13	28803	Nut	
14	31054	Idler Lever	Models through Serial No. 9507005924
	37443	Idler Lever	Models starting Serial No. 9507005925
15	81392	Washer	
16	27229	Screw	
17	28849	Spring Clip	
18	28802P	Idler Shaft	
19	29443	Washer	Felt
20	52549	Washer	Nylatron
21	23748	Retaining Ring	
22	28043	Pump Belt	
23	35517	Belt	Agitate and spin
24	28800P	Idler Pulley	
25	37366	Idler Spring	Models through Serial No. 9507005924
	37606	Idler Lever Spring	Models starting Serial No. 9507005925
26	35423	Nut	
27	34791	Motor Mount Post	
28	34788	Motor Mount	

*** Add Letter To Designate Color. H - Harvest Gold L - Almond W - White**

N/A = Part no longer available

© Copyright, Alliance Laundry Systems LLC – DO NOT COPY or TRANSMIT

Outer Tub, Cover and Pressure Hose

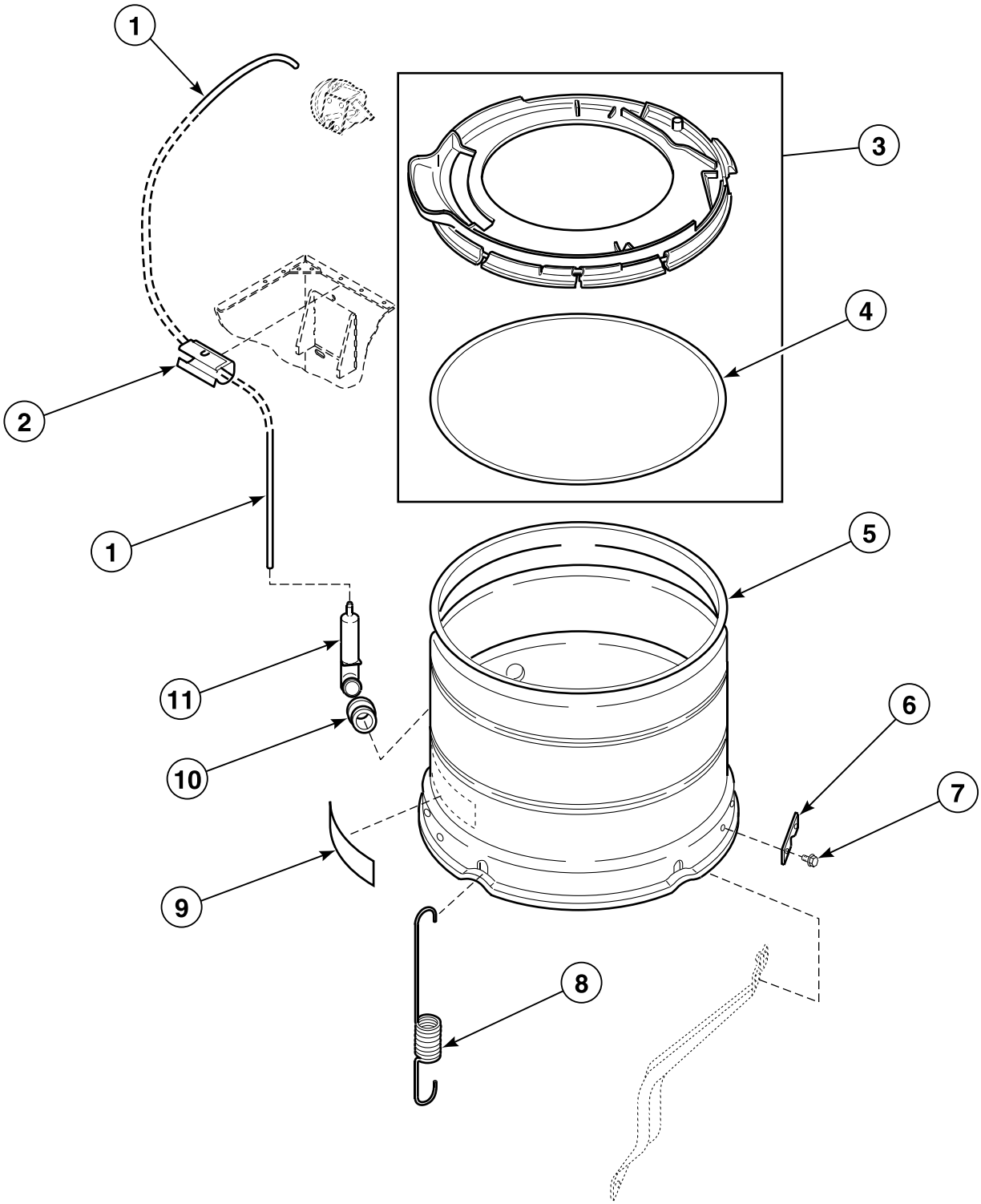

W267P_36313

© Copyright, Alliance Laundry Systems LLC – DO NOT COPY or TRANSMIT

Outer Tub, Cover and Pressure Hose

REF	PART NO.	DESCRIPTION	COMMENTS
1	39125	Tubing	
2	36985	Hose Clip	
3	36025P	Tub Cover Kit	Includes item 4
4	32857	Tub Cover Gasket	
5	34439P	Outer Tub Kit	Models AWM250*-2200, AWM251*-2200, AWM251*-99E7, AWM270*-3062 and SWM190*
	34438P	Outer Tub Assembly	All other models
6	27926	Leg Plate	
7	35369	Screw	
8	35947	Tub Spring	Models AWM250*-2200, AWM270*-3062 and SWM190*
	35948	Leg Spring	All other models
9	500049	Warning Label	
10	29175	Grommet	
11	30907	Pressure Bulb	

*** Add Letter To Designate Color. H - Harvest Gold L - Almond W - White**

© Copyright, Alliance Laundry Systems LLC – DO NOT COPY or TRANSMIT

Direct Drive Pump with Plastic Drain Hose and Siphon Break Kit

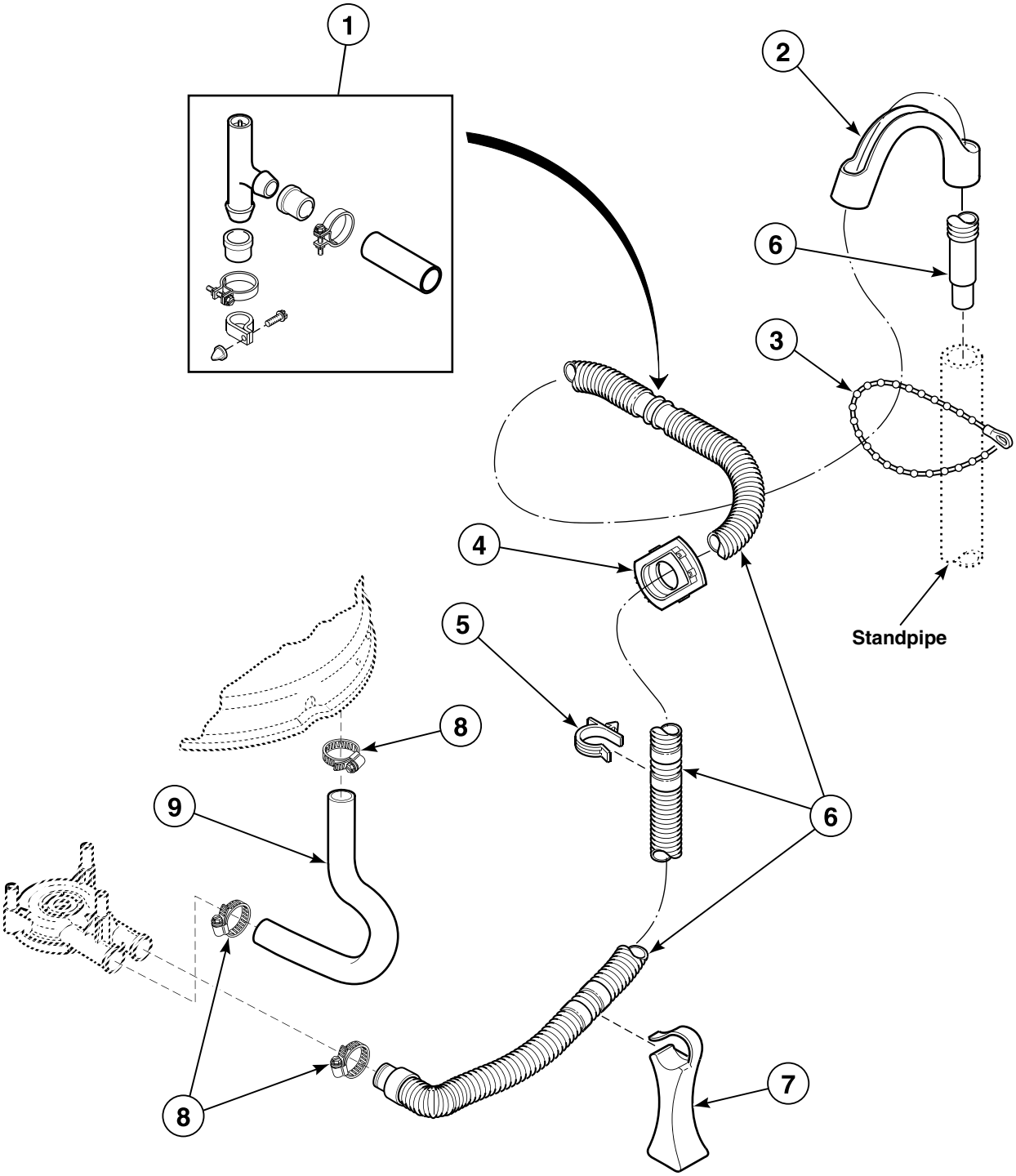

W286P_36313

© Copyright, Alliance Laundry Systems LLC – DO NOT COPY or TRANSMIT

Direct Drive Pump with Plastic Drain Hose and Siphon Break Kit

REF	PART NO.	DESCRIPTION	COMMENTS
	451P3	Drain Extension Kit	Use with 20616 Drain Hose; Order by the foot, as required
1	562P3	Siphon Break Kit	Kit **MUST** be installed in drain hose if drain receptacle is lower than cabinet top of washer
2	33615	Drain Hose Sleeve	
3	33489	Standpipe Strap	
4	32219	Strain Relief	
5	36014	Retainer Clip	
6	39950	Drain Hose	
7	35487	Hose Support	Models through Serial No. 9502022146
	36522	Hose Support	Models starting Serial No. 9502022147
8	36802	Hose Clamp	
9	35752	Tub-to-Pump Hose	Model AWM251*-99E7
	35753	Tub-to-Pump Hose	All other models

*** Add Letter To Designate Color. H - Harvest Gold L - Almond W - White**

© Copyright, Alliance Laundry Systems LLC – DO NOT COPY or TRANSMIT

Belt Drive Pump with Plastic Drain Hose and Siphon Break Kit

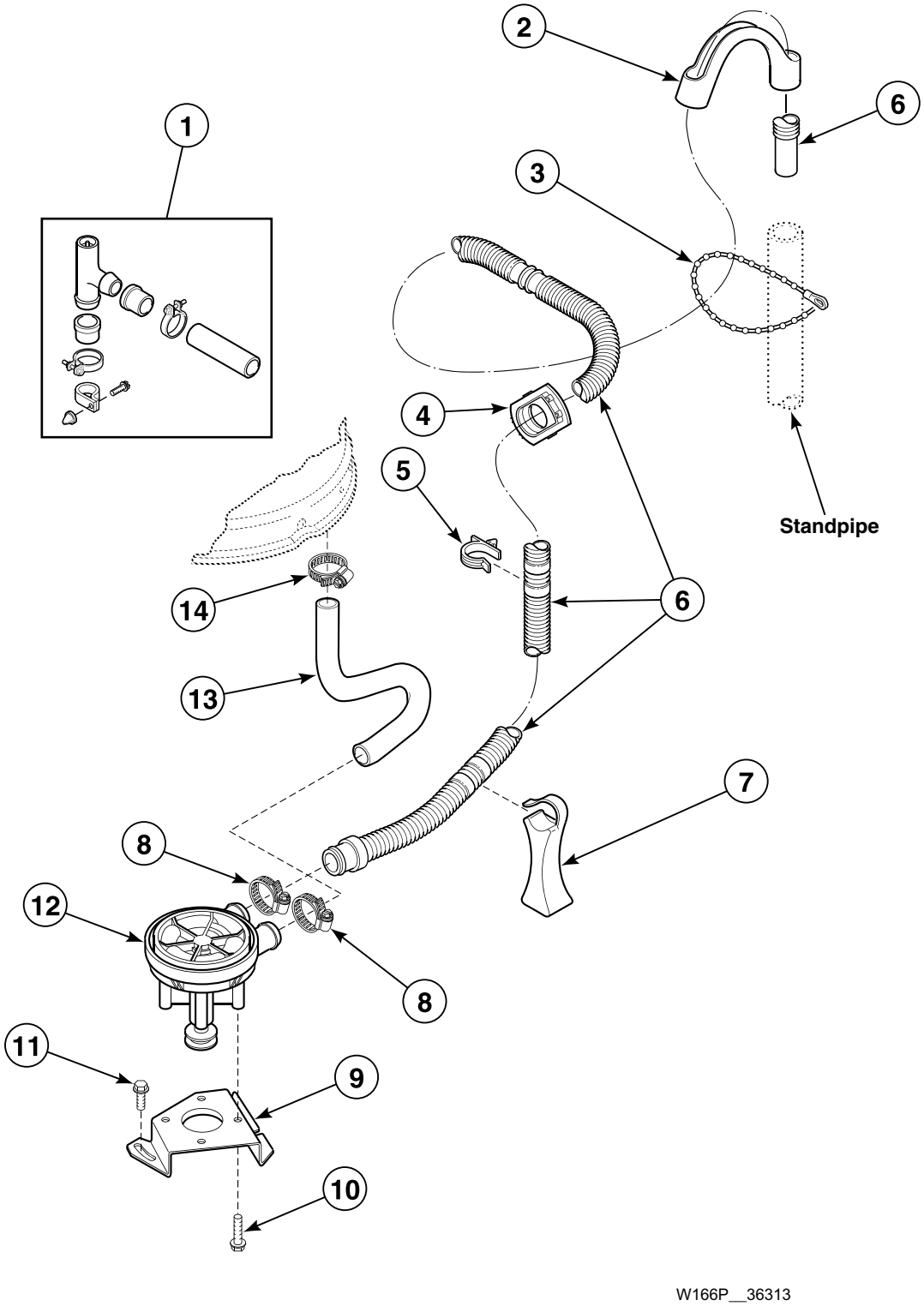

© Copyright, Alliance Laundry Systems LLC – DO NOT COPY or TRANSMIT

Belt Drive Pump with Plastic Drain Hose and Siphon Break Kit

REF	PART NO.	DESCRIPTION	COMMENTS
	451P3	Drain Extension Kit	Use with 20616 Drain Hose; Order by the foot, as required
1	562P3	Siphon Break Kit	Kit **MUST** be installed in drain hose if drain receptacle is lower than cabinet top of washer
2	33615	Drain Hose Sleeve	
3	33489	Standpipe Strap	
4	32219	Strain Relief	
5	36014	Retainer Clip	
6	39953	Drain Hose	
7	35487	Hose Support	Models through Serial No. 9502022146
	36522	Hose Support	Models starting Serial No. 9502022147
8	20211	Hose Clamp	
9	35162	Pump Mounting Bracket	
10	N/A	Screw	
11	503661	Screw	
12	31969	Pump Assembly	Includes 4 of item 10
13	35755	Tub-to-Pump Hose	
14	36802	Hose Clamp	

N/A = Part no longer available

© Copyright, Alliance Laundry Systems LLC – DO NOT COPY or TRANSMIT

Belt Drive Pump with Rubber Drain Hose and Siphon Break Kit

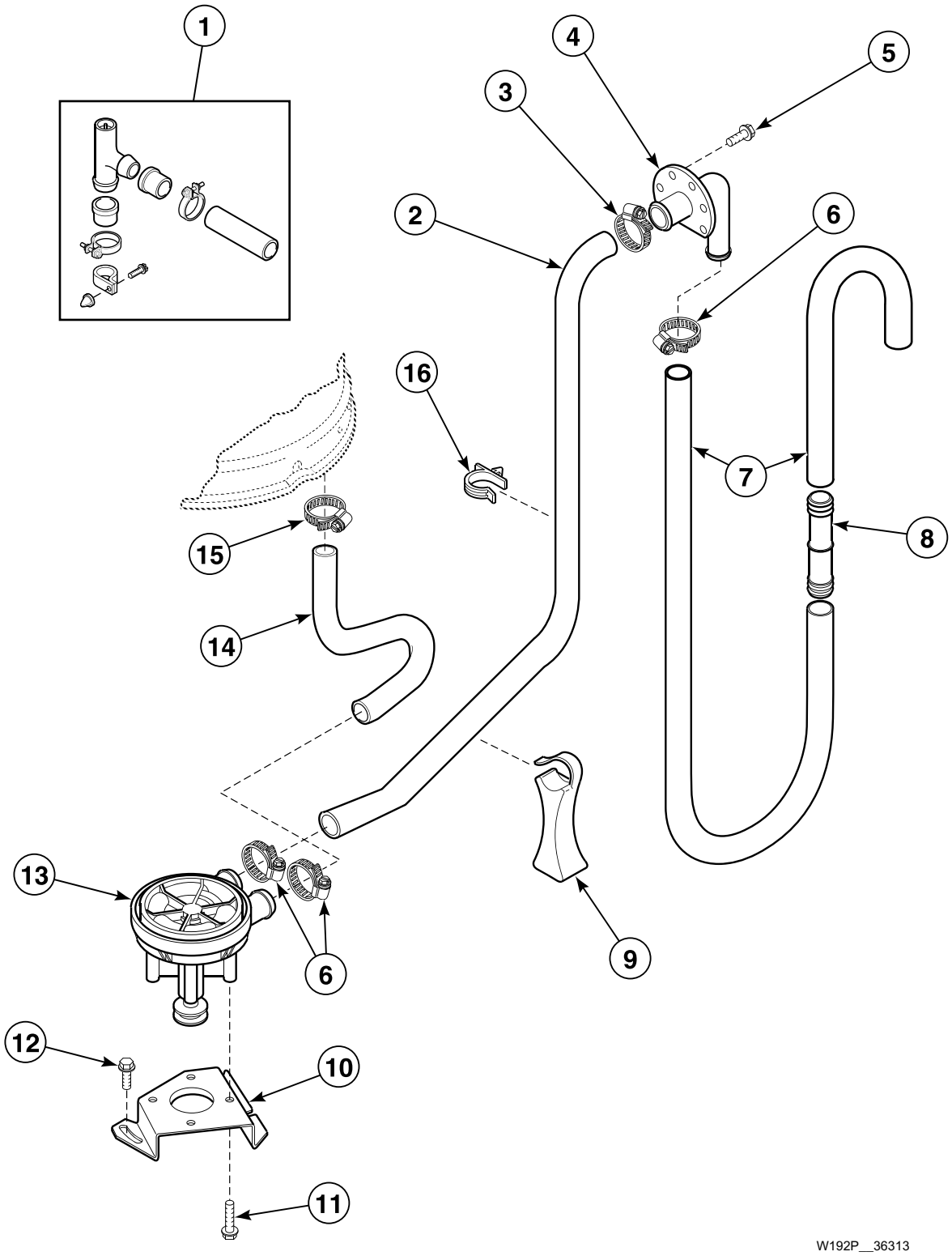

© Copyright, Alliance Laundry Systems LLC – DO NOT COPY or TRANSMIT

Belt Drive Pump with Rubber Drain Hose and Siphon Break Kit

REF	PART NO.	DESCRIPTION	COMMENTS
1	562P3	Siphon Break Kit	Kit **MUST** be installed in drain hose if drain receptacle is lower than cabinet top of washer.
2	27161	Pump-to-Drain Elbow Hose	
3	20391	Hose Clamp	
4	35766	Drain Hose Elbow	
5	52909	Screw	
6	20211	Hose Clamp	
7	28293	Drain Hose	
8	25863	Hose Coupler	Use to splice drain hose if hose must be shortened. Cut hose between molded end and molded elbow.
9	35487	Hose Support	Models through Serial No. 9502022146
	36522	Hose Support	Models starting Serial No. 9502022147
10	35162	Pump Mounting Bracket	
11	N/A	Screw	
12	503661	Screw	
13	31969	Pump Assembly	Includes 4 of item 11
14	35752	Tub-to-Pump Hose	
15	36802	Hose Clamp	

N/A = Part no longer available

© Copyright, Alliance Laundry Systems LLC – DO NOT COPY or TRANSMIT

Electric Drain Pump with Rubber Drain Hose and Siphon Break Kit

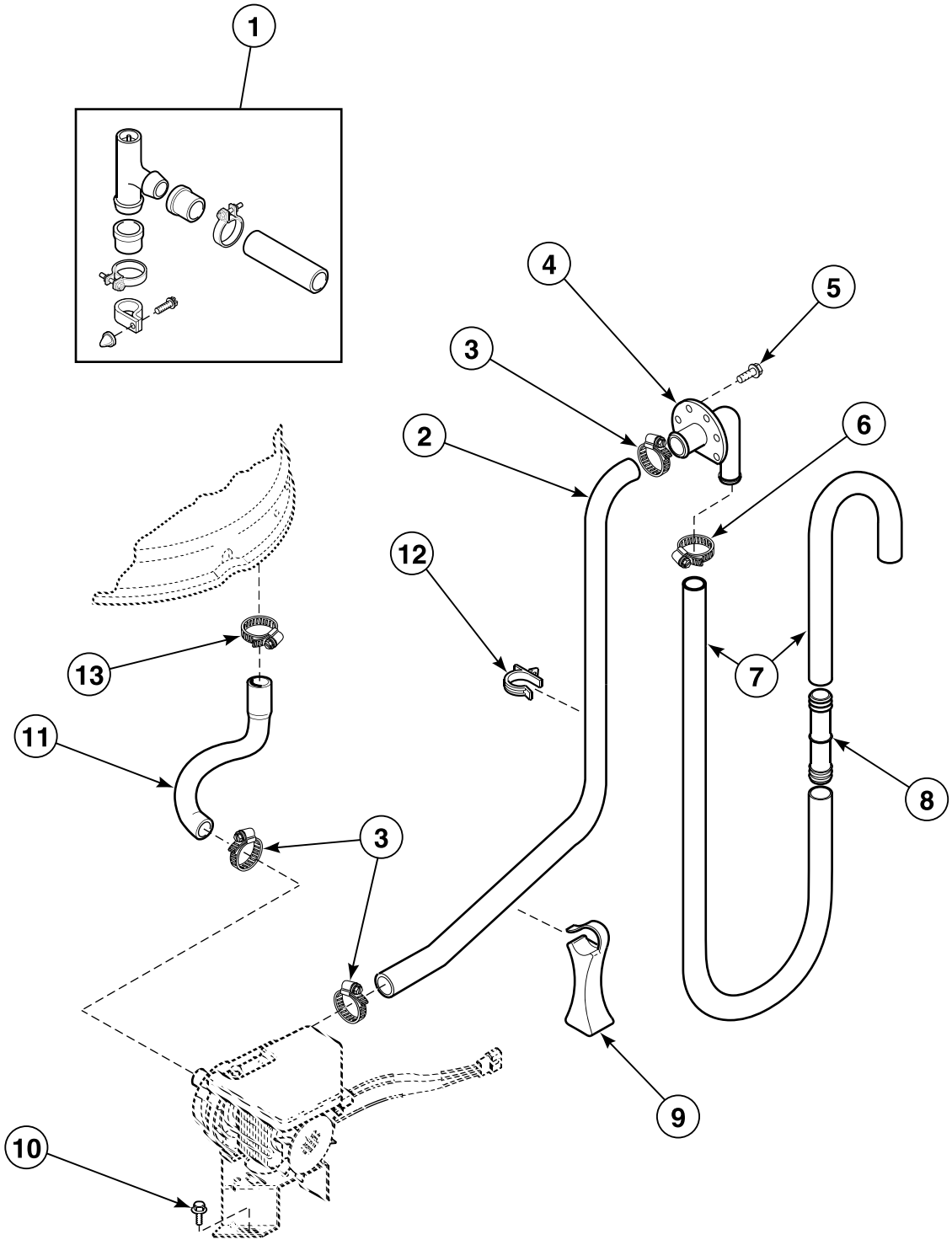

W287P_36313

© Copyright, Alliance Laundry Systems LLC – DO NOT COPY or TRANSMIT

Electric Drain Pump with Rubber Drain Hose and Siphon Break Kit

REF	PART NO.	DESCRIPTION	COMMENTS
1	562P3	Siphon Break Kit	Kit **MUST** be installed in drain hose if drain receptacle is lower than cabinet top of washer.
2	35921P	Pump-to-Drain Elbow Hose	
3	20391	Hose Clamp	
4	35766	Drain Hose Elbow	
5	52909	Screw	
6	20211	Hose Clamp	
7	28293	Drain Hose	
8	25863	Hose Coupler	Use to splice drain hose if hose must be shortened. Cut hose between molded end and molded elbow.
9	35487	Hose Support	Models through Serial No. 9502022146
	36522	Hose Support	Models starting Serial No. 9502022147
10	503661	Screw	
11	N/A	Tub-to-Pump Hose	
12	36014	Retainer Clip	
13	36802	Hose Clamp	

N/A = Part no longer available

© Copyright, Alliance Laundry Systems LLC – DO NOT COPY or TRANSMIT

Electric Drain Pump with Plastic Drain Hose and Siphon Break Kit

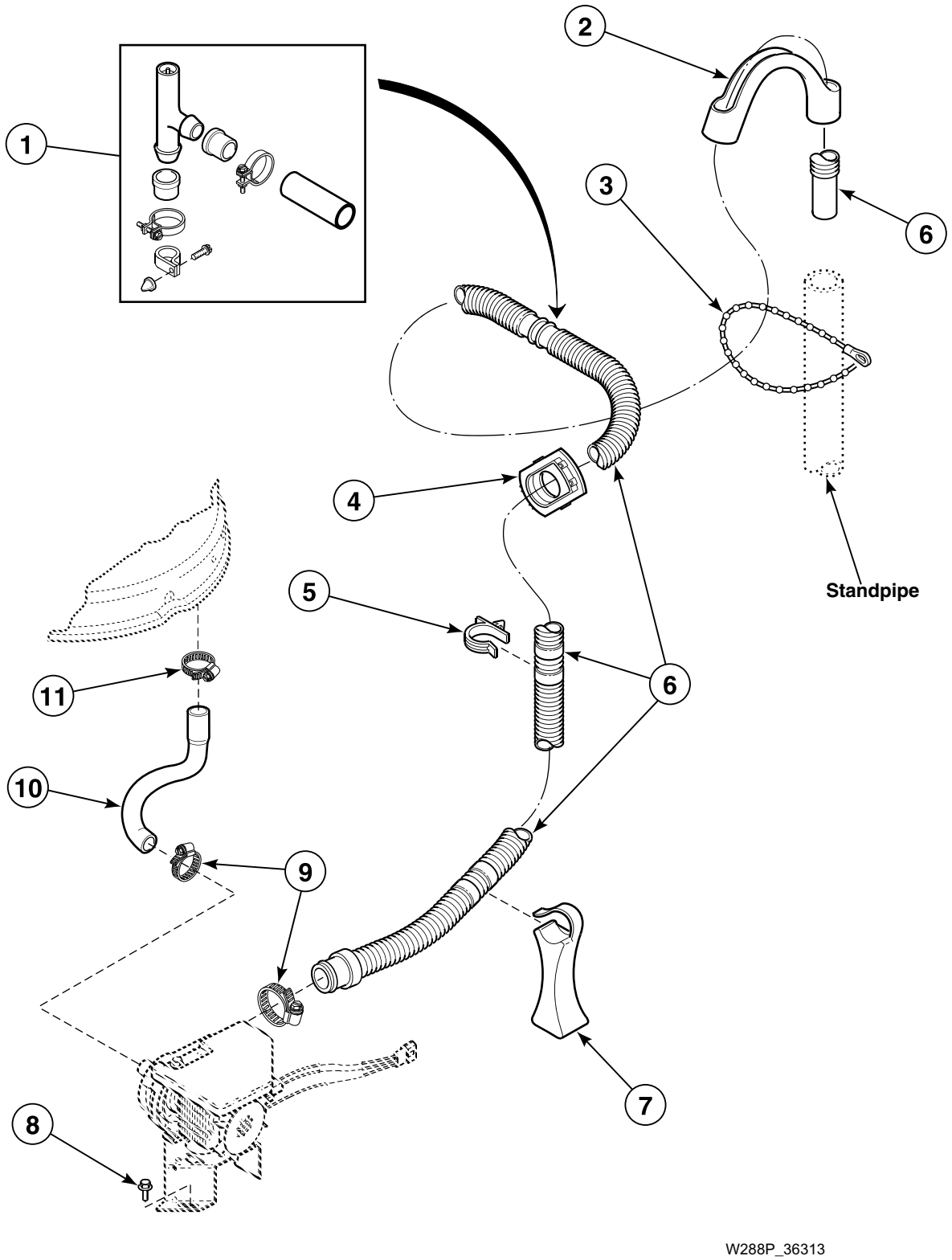

© Copyright, Alliance Laundry Systems LLC – DO NOT COPY or TRANSMIT

Electric Drain Pump with Plastic Drain Hose and Siphon Break Kit

REF	PART NO.	DESCRIPTION	COMMENTS
1	562P3	Siphon Break Kit	Kit **MUST** be installed in drain hose if drain receptacle is lower than cabinet top of washer
2	33615	Drain Hose Sleeve	
3	33489	Standpipe Strap	
4	32219	Strain Relief	
5	36014	Retainer Clip	
6	39951	Drain Hose	
7	35487	Hose Support	Models through Serial No. 9502022146
	36522	Hose Support	Models starting Serial No. 9502022147
8	503661	Screw	
9	20391	Hose Clamp	
10	N/A	Tub-to-Pump Hose	
11	36802	Hose Clamp	

N/A = Part no longer available

© Copyright, Alliance Laundry Systems LLC – DO NOT COPY or TRANSMIT

Electric Drain Pump

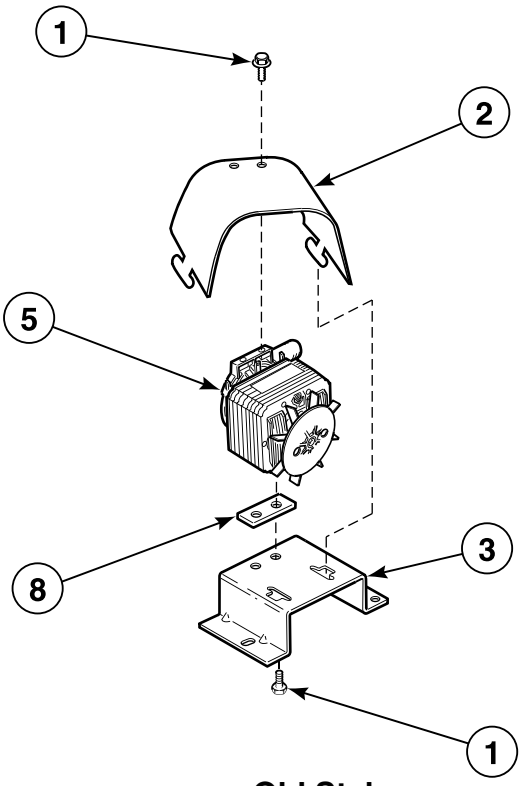

Old Style

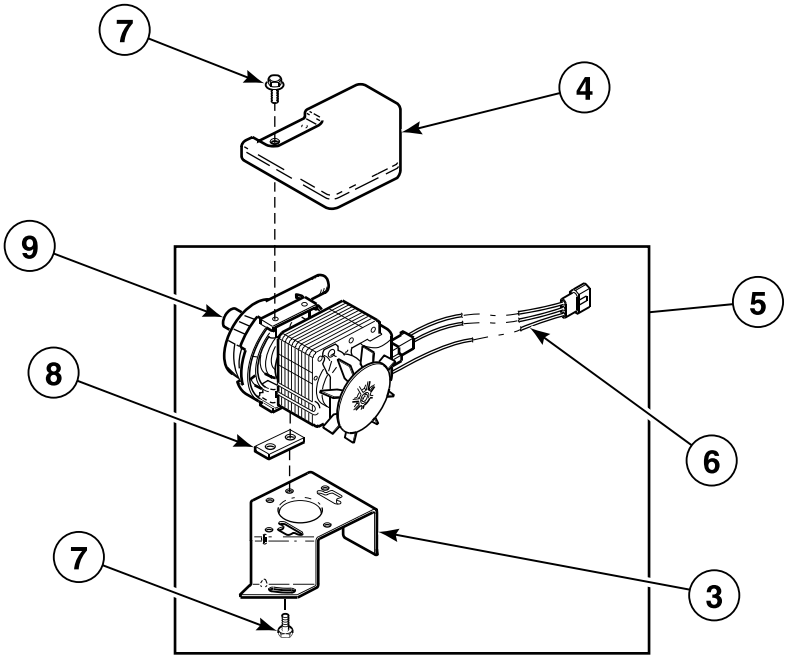

New Style

W289P_36313

© Copyright, Alliance Laundry Systems LLC – DO NOT COPY or TRANSMIT

Electric Drain Pump

REF	PART NO.	DESCRIPTION	COMMENTS
1	38096	Screw	
2	N/A	Shield	
3	35819	Pump Mounting Bracket	Models through Serial No. 9502022146
	36492	Pump Mounting Bracket	Models starting Serial No. 9502022147
4	38067	Pump Shield	
5	648P3	Electric Pump Kit	
6	38068	Pump Wire Harness Assembly	
7	38096	Screw	
8	38095	Pump Isolator	Models starting Serial No. 9603009614
9	39255P	Drain Pump	

N/A = Part no longer available

© Copyright, Alliance Laundry Systems LLC – DO NOT COPY or TRANSMIT

Bearing Housing, Brake, Pulley and Pivot Dome

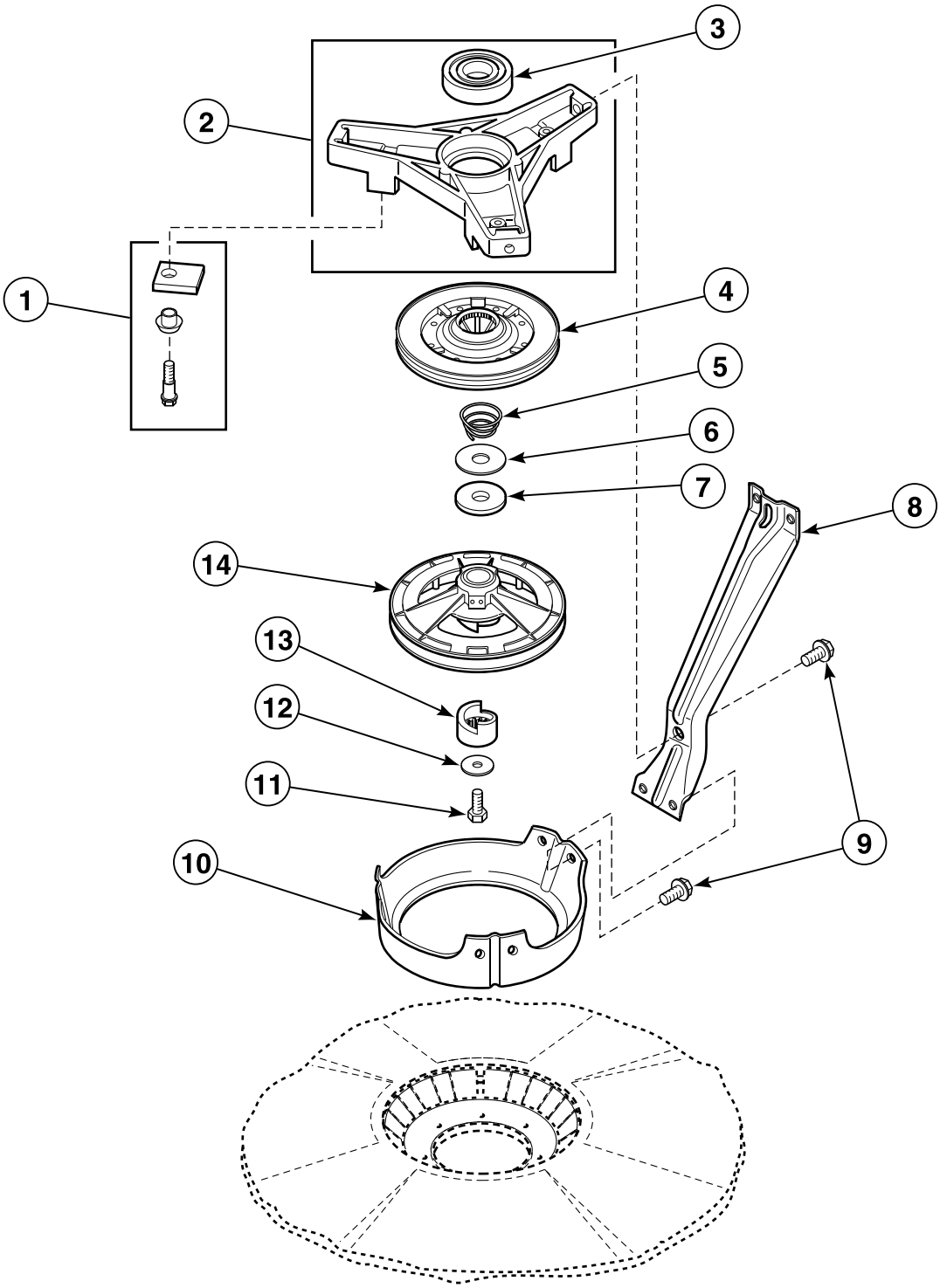

W164P_36313

© Copyright, Alliance Laundry Systems LLC – DO NOT COPY or TRANSMIT

Bearing Housing, Brake, Pulley and Pivot Dome

REF	PART NO.	DESCRIPTION	COMMENTS
	26594P	Silicone Grease	Apply small amount to each new brake pad
1	548P3	Brake Pad Kit	Includes 3 pads, sleeves and screws
2	35746	Bearing Housing Assembly	
3	28944RP	Upper or Lower Bearing	
4	38505P	Brake Kit	
5	33435	Spring	Models through Serial No. 9606029041
6	35535	Washer	Thin
7	27015	Washer	Thick
8	34792	Support Leg	Models AWM251*-99E7, AWM270*-3062 and SWM190*
	34471	Support Leg	All other models
9	35369	Screw	
10	34470	Pivot Dome	
11	27220	Screw	
12	26509	Washer	
13	27018	Helix	
14	34923	Pulley Assembly	Models AWM251*-2200 and AWM251*-99E7
	35310	Pulley Assembly	Models AWM250*-2200, AWM270*-3062 and SWM190*
	N/A	Pulley Assembly	All other 50 Hertz models
	34921	Pulley Assembly	All other 60 Hertz models

*** Add Letter To Designate Color. H - Harvest Gold L - Almond W - White**

N/A = Part no longer available

© Copyright, Alliance Laundry Systems LLC – DO NOT COPY or TRANSMIT

Transmission Assembly and Balance Ring

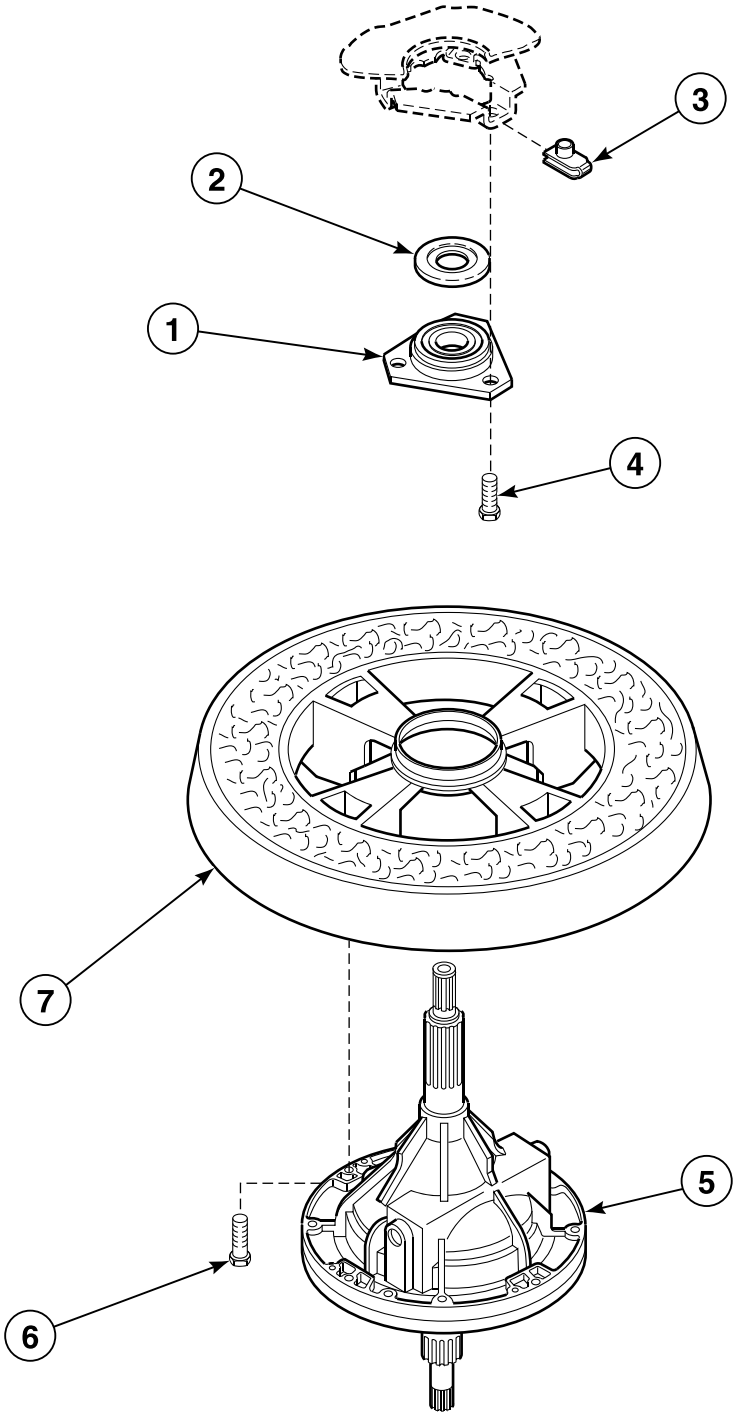

W290P_36313

© Copyright, Alliance Laundry Systems LLC – DO NOT COPY or TRANSMIT

Transmission Assembly and Balance Ring

REF	PART NO.	DESCRIPTION	COMMENTS
	27604P	Anti-Seize Compound	Apply to upper and lower transmission tubes
1	27182	Bearing Housing Assembly	
2	27187	Flinger	Models through Serial No. 9510053576
3	27222	Nut	
4	M400057	Screw	
5	34526P	Transmission Assembly	
6	N/A	Screw	
7	34731P	Balance Ring Assembly	

N/A = Part no longer available

© Copyright, Alliance Laundry Systems LLC – DO NOT COPY or TRANSMIT

34526P Transmission Assembly

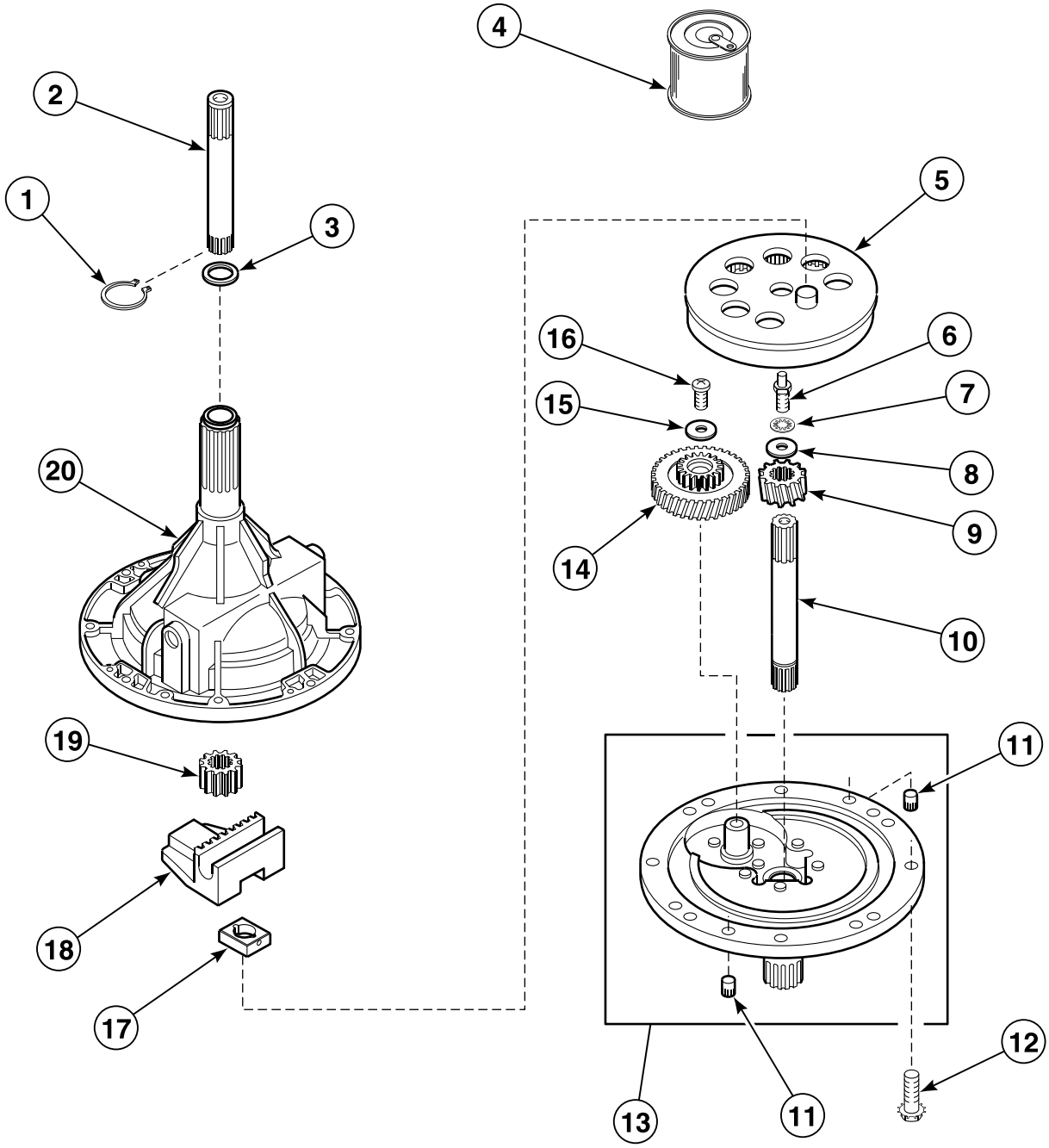

© Copyright, Alliance Laundry Systems LLC – DO NOT COPY or TRANSMIT

34526P Transmission Assembly

REF	PART NO.	DESCRIPTION	COMMENTS
	37577P	Transmission Sealant	Use between transmission case and cover
1	27197	Retaining Ring	
2	36570P	Output Shaft	
3	35092	Washer	
4	27243P	Transmission Oil	1 fill
5	26577	Gear and Stud Assembly	
6	201773	Screw	
7	21456	Washer	
8	26509	Washer	
9	36562P	Drive Pinion	
10	34853P	Input Shaft	
11	N/A	Dowel Pin	Models through Serial No. 9404069377
12	32814	Screw	
13	38290P	Transmission Cover Assembly	
14	29161P	Reduction Gear	
15	29260	Washer	
16	29273	Screw	
17	26493	Slide	
18	201664	Rack	
19	27003	Agitator Pinion	
20	33223P	Transmission Case Assembly	

N/A = Part no longer available

© Copyright, Alliance Laundry Systems LLC – DO NOT COPY or TRANSMIT

Front Panel, Base and Cabinet Assembly

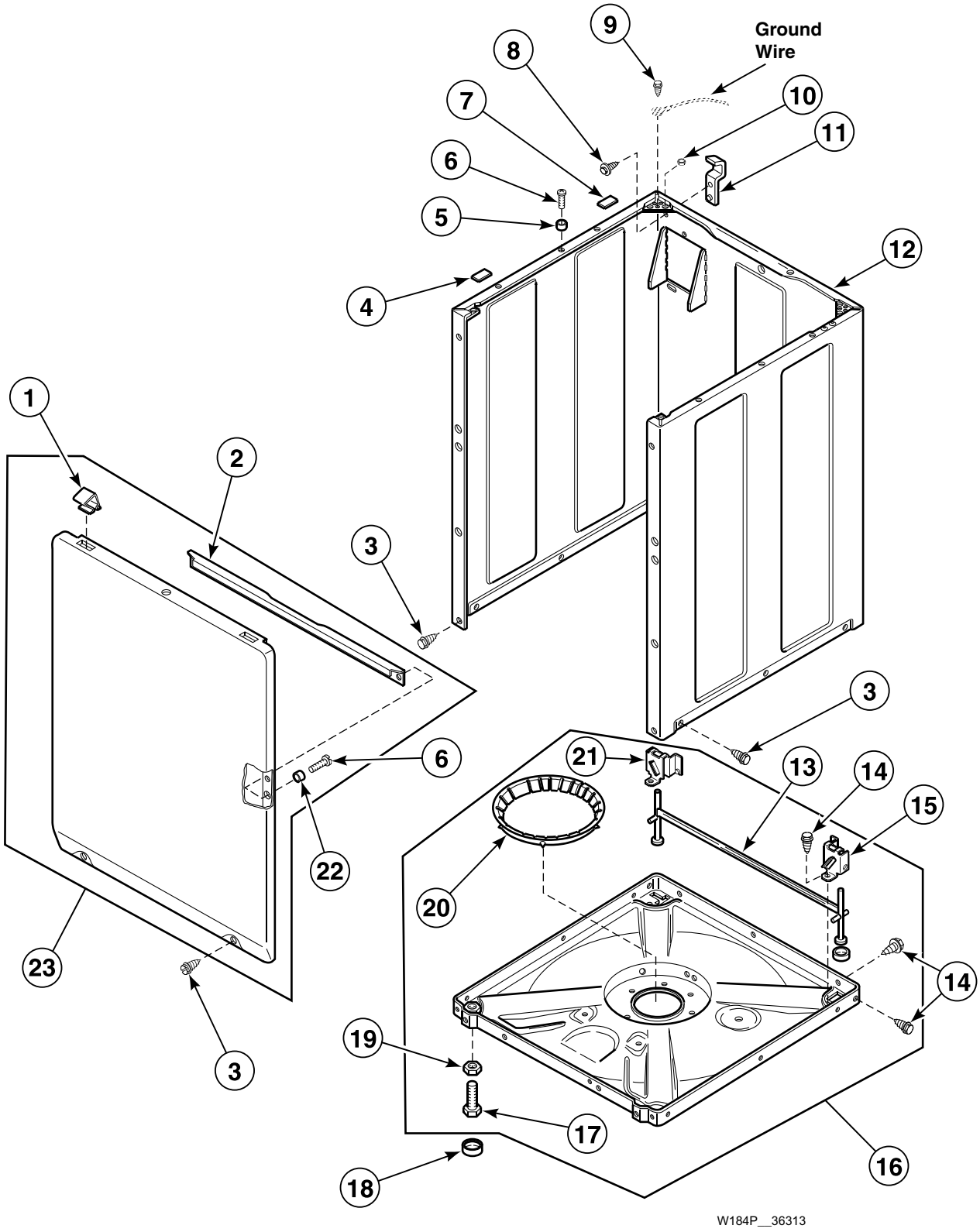

© Copyright, Alliance Laundry Systems LLC – DO NOT COPY or TRANSMIT

Front Panel, Base and Cabinet Assembly

REF	PART NO.	DESCRIPTION	COMMENTS
1	35865	Hold-Down Clip	
2	35097	Front Panel Brace	
3	27196	Screw	
4	56128	Bumper Pad	Thin
5	56079	Panel Locator	
6	39733	Screw	
7	36226	Bumper Pad	Thick
8	51780	Screw	
9	28448	Screw	
10	28447	Nut	
11	27103	Hold-Down Lug Hinge	
12	38612WP	Service Cabinet Kit	White
	38612LP	Service Cabinet Kit	Almond
13	34443	Leg and Stabilizer Assembly	
14	35148	Screw	
15	36036	Bracket	Right
16	34434P	Base Kit	Models through Serial No. 9502022146; Includes items 13-15, 17, 19-21 and attaching hardware
	36599P	Base Kit	Models starting Serial No. 9502022147; Includes items 13-15, 17, 19-21 and attaching hardware
17	34319	Leveling Leg	
18	34318	Rubber Foot	
19	21899	Nut	
20	36108	Snubber Pad Assembly	
21	36037	Bracket	Left
22	28102	Panel Locator	
23	34656WP	Front Panel Assembly	White; Includes items 1, 2, 22 and attaching hardware
	34656LP	Front Panel Assembly	Almond; Includes items 1, 2, 22 and attaching hardware

© Copyright, Alliance Laundry Systems LLC – DO NOT COPY or TRANSMIT

Terminal Block and Hardware

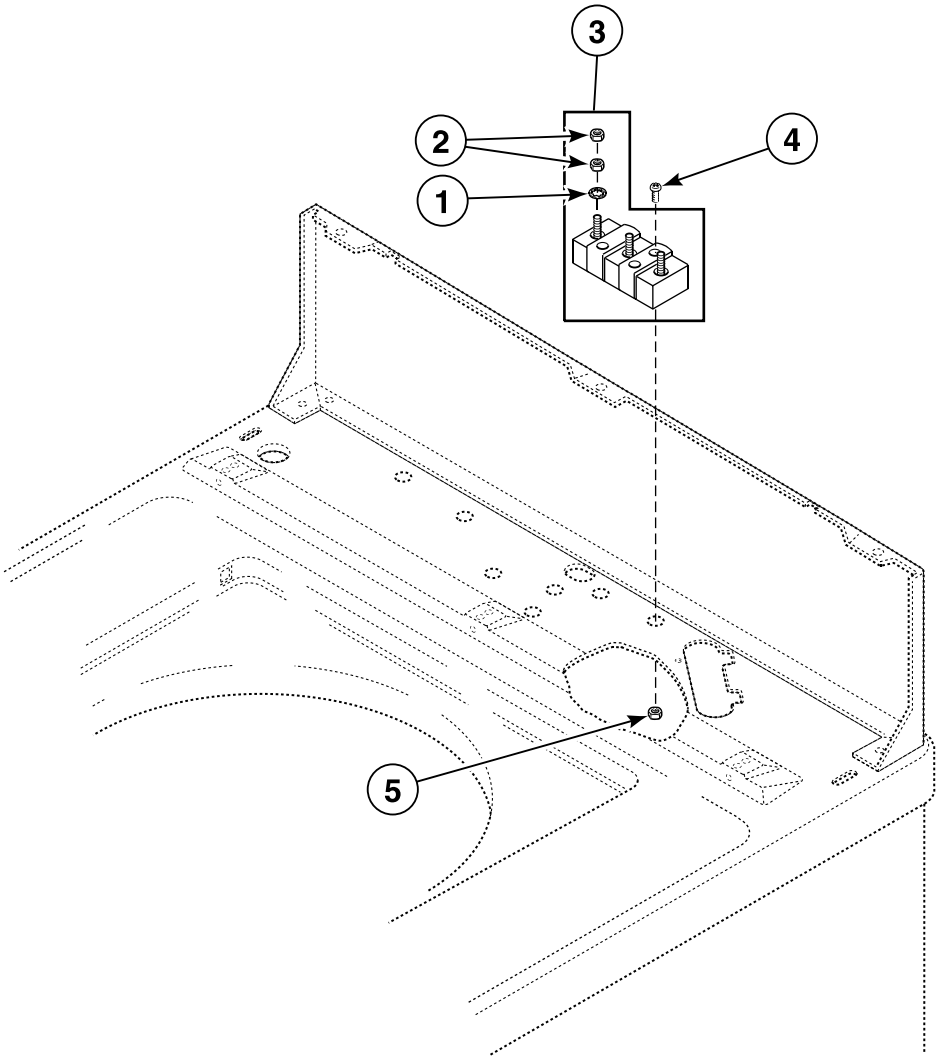

W291P_36313

© Copyright, Alliance Laundry Systems LLC – DO NOT COPY or TRANSMIT

Terminal Block and Hardware

REF	PART NO.	DESCRIPTION	COMMENTS
1	20492	Washer	
2	Q6163	Nut	
3	50854A	Terminal Block Assembly	
4	Q6535	Screw	
5	03673	Nut	

© Copyright, Alliance Laundry Systems LLC – DO NOT COPY or TRANSMIT

Connection Blocks, Terminals and Terminal Extractor Tool

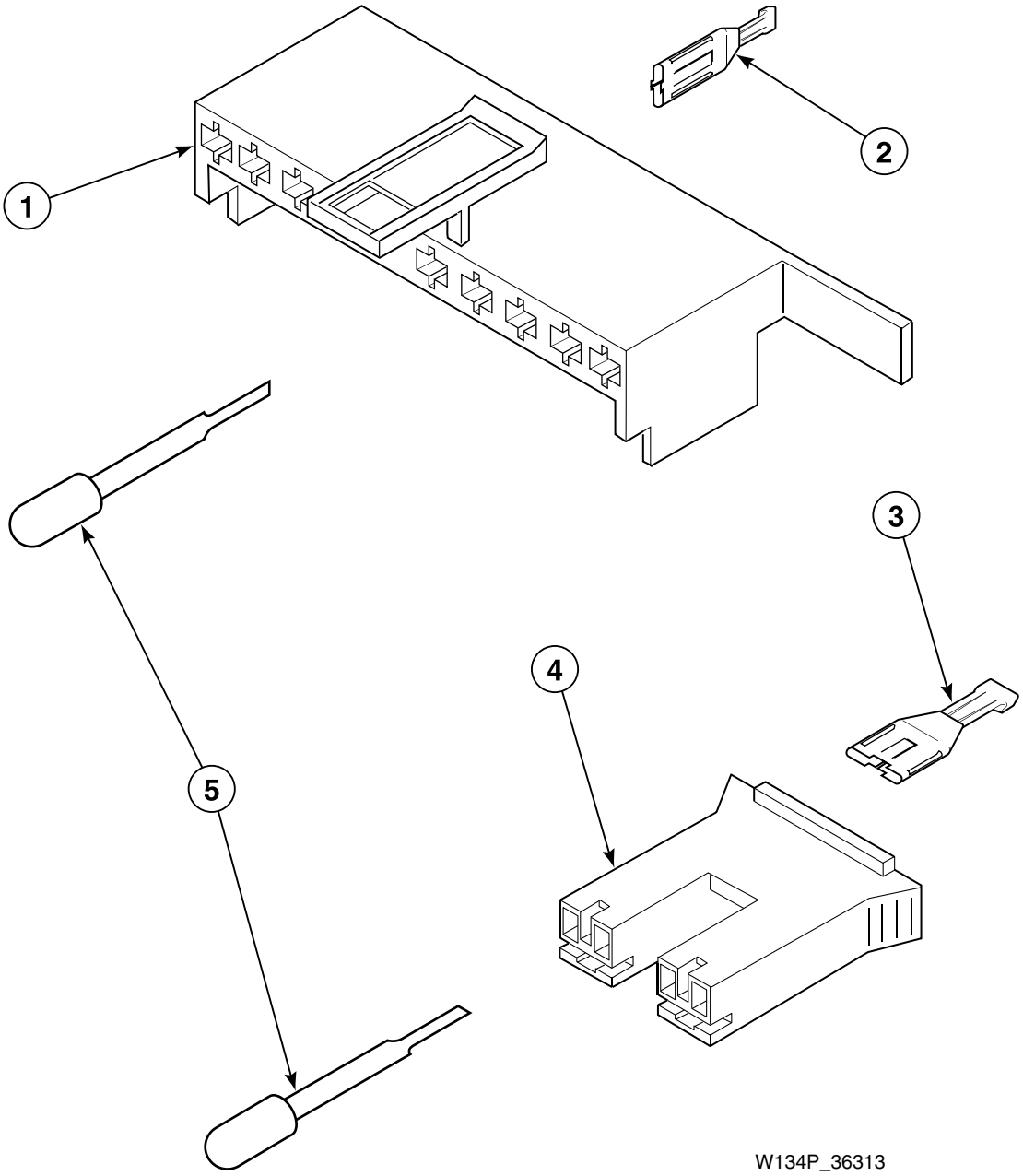

© Copyright, Alliance Laundry Systems LLC – DO NOT COPY or TRANSMIT

Connection Blocks, Terminals and Terminal Extractor Tool

REF	PART NO.	DESCRIPTION	COMMENTS
1	34677	10 Circuit Plug	Motor
2	00188	Female Terminal	For 1 or 2 wire application
3	00121	Female Spade Terminal	1/4 inch
4	34675	Mixing Valve Plug	Mixing valve; Natural
	34676	Mixing Valve Plug	Mixing valve; Red
5	283P4	Terminal Extractor Tool	

© Copyright, Alliance Laundry Systems LLC – DO NOT COPY or TRANSMIT

Special Tools (Drawing 1 of 2)

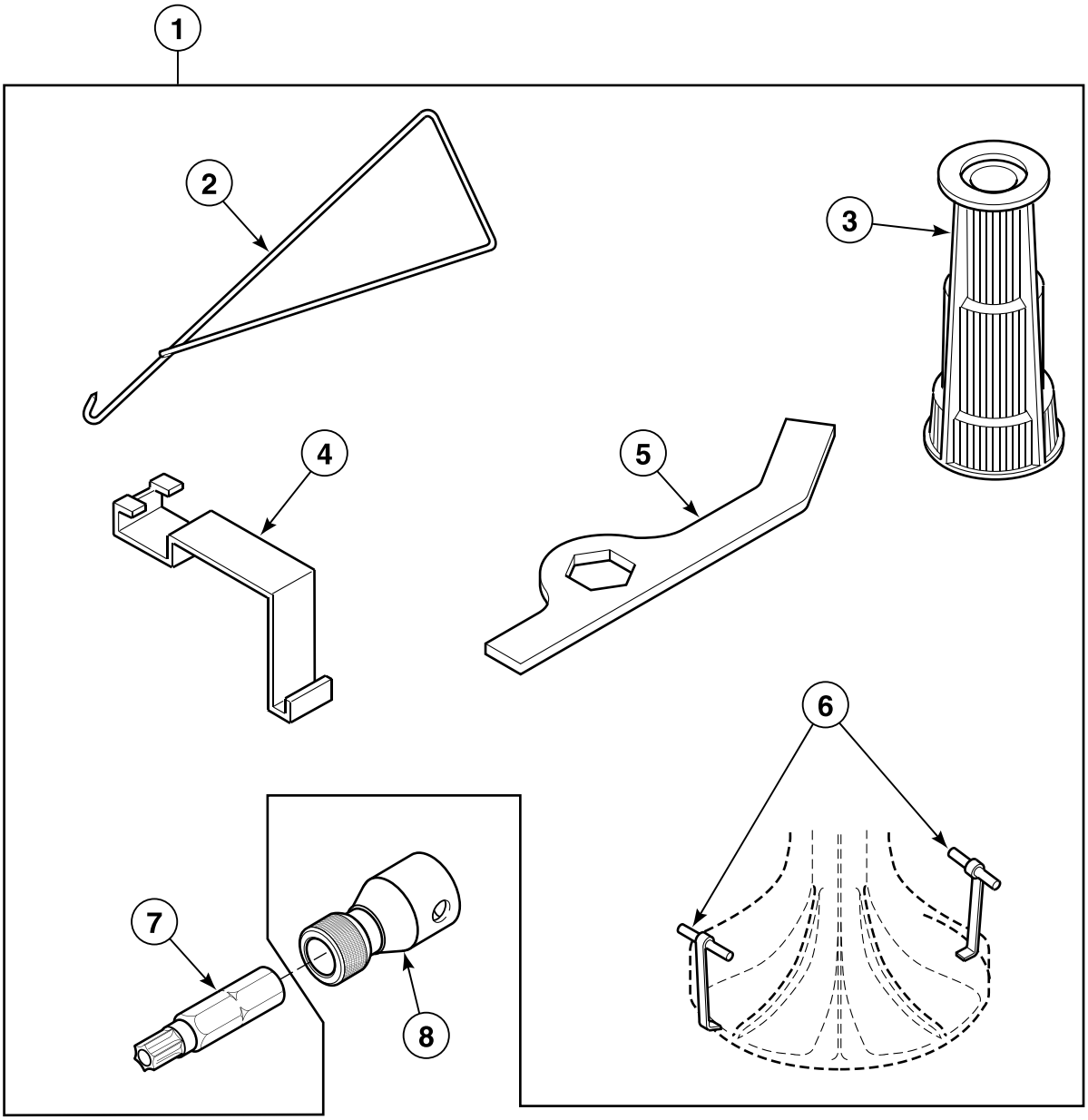

TLW1649P_36313

© Copyright, Alliance Laundry Systems LLC – DO NOT COPY or TRANSMIT

Special Tools (Drawing 1 of 2)

REF	PART NO.	DESCRIPTION	COMMENTS
1	725P3	Tool Kit	Includes items 2-7
2	321P4	Spring Hook Tool	For removal of centering springs from outer tub
3	293P4	Drive Bell Seal Tool	For installation of 36425 Bell and Transmission Tube Seal
4	273P4	Tub Cover Removal Tool	Use to remove 36025 Tub Cover Assembly and install 32857 Tub Cover Gasket in outer tub cover
5	306P4	Hex Wrench Tool	For removal of locknut from washtub hub
6	254P4P	Agitator Hook	Use to remove agitator from drive bell; Set of 2
7	281P4	Torx Bit	For removal and installation of control hood security screws
	282P4	Torx Bit	For removal and installation of front panel security screws
8	24161	Bit Holder	3/8 inch drive

© Copyright, Alliance Laundry Systems LLC – DO NOT COPY or TRANSMIT

Special Tools (Drawing 2 of 2)

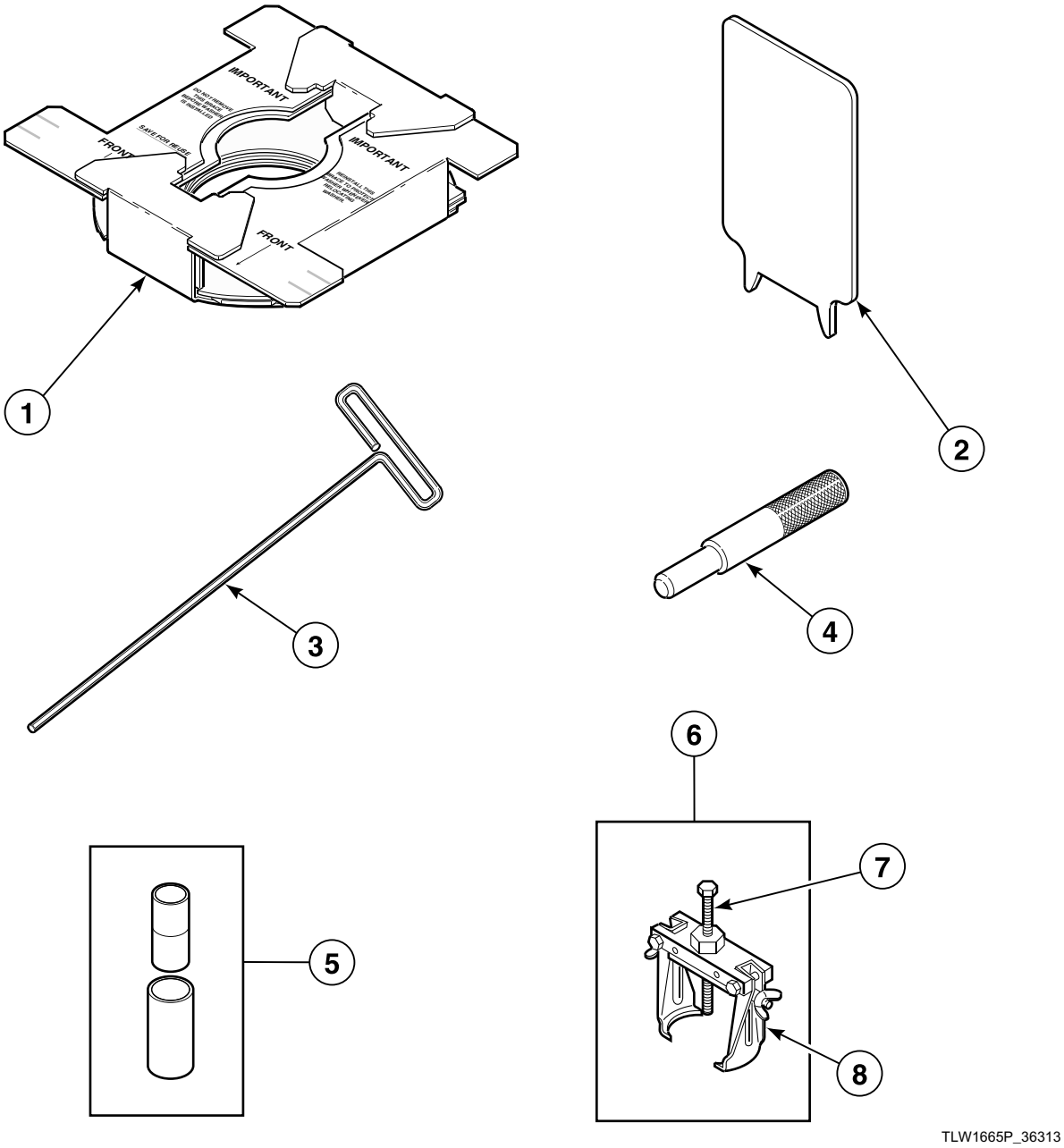

© Copyright, Alliance Laundry Systems LLC – DO NOT COPY or TRANSMIT

Special Tools (Drawing 2 of 2)

REF	PART NO.	DESCRIPTION	COMMENTS
1	N/A	Shipping Brace	
2	272P4	Lid Switch Installation Tool	Use to install lid switch
3	N/A	T-Handle Allen Wrench	For removal and installation of 3 pump assembly attaching screws
4	305P4	Transmission Pin Tool	Use pin tools in place of dowel pins when reassembling transmission cover and case; 2 required
5	242P4	Spring Installer	For installing brake spring
6	294P4	Agitator Drive Bell Puller	For removal and installation of drive bell transmission shaft
7	294P4B	Bolt	To update item 6
8	294P4A	Drive Bell Puller Arm	To update item 6

N/A = Part no longer available

© Copyright, Alliance Laundry Systems LLC – DO NOT COPY or TRANSMIT

Power Cord and Terminals

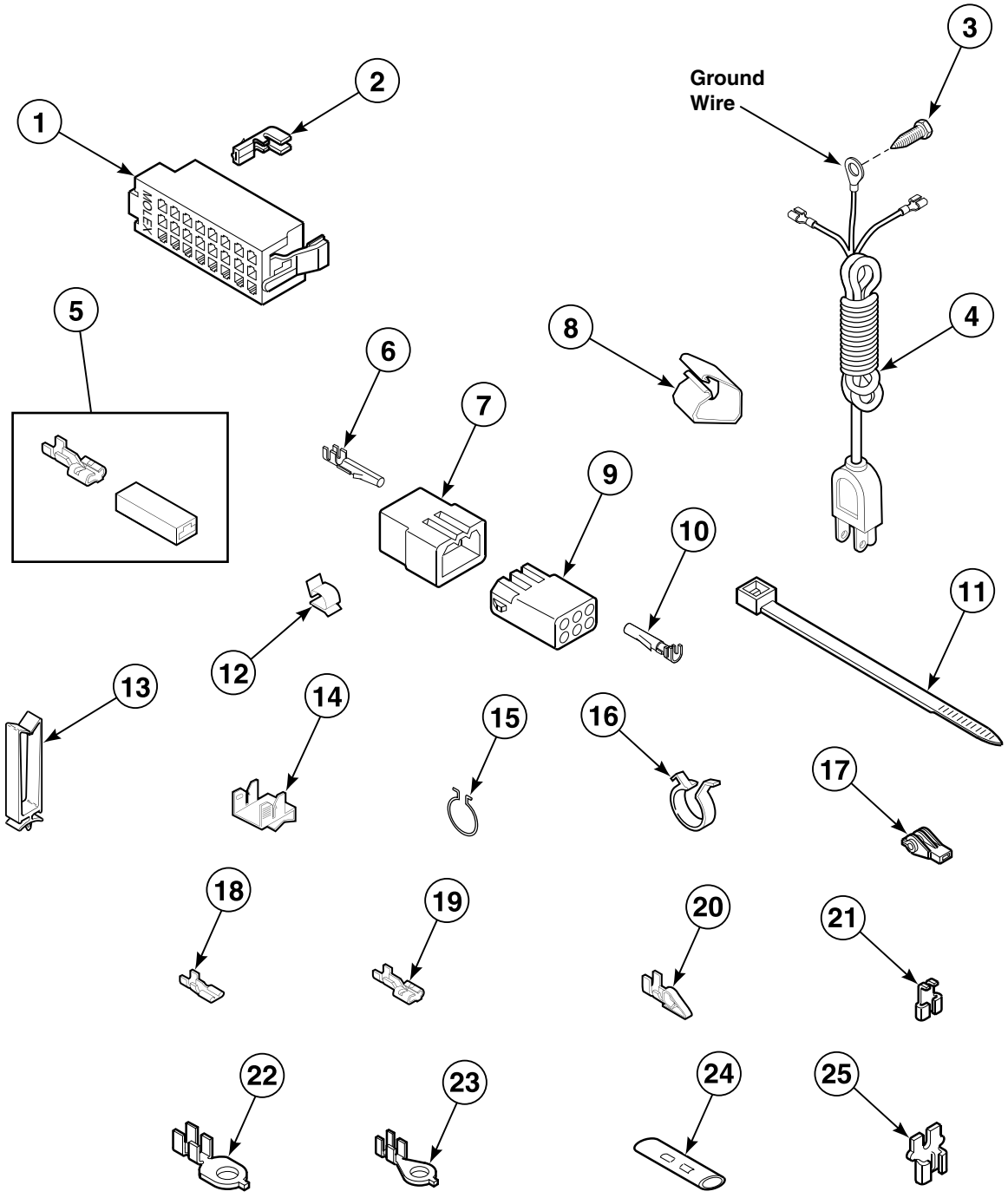

W185P__36313

© Copyright, Alliance Laundry Systems LLC – DO NOT COPY or TRANSMIT

Power Cord and Terminals

REF	PART NO.	DESCRIPTION	COMMENTS
1	32746	24 Position Housing	Right hand
	34123	24 Position Housing	Left hand
2	00188	Female Terminal	Use for 1 or 2 wire application
3	52909	Screw	
4	38365	Lead-In Cord	Models AWM270*-3062, AWM372*-3062, AWM373*-3062, RWM274*-3062, RWM372*-3062, RWM373*-3062 and SWM190*
	36770	Lead-In Cord Assembly	Models AWM393*-3050, AWM393*23050, KAW393*-3050, KAW693*-3050 and KAW793*-3050
	N/A	Power Cord	Models AWM393*-3059, AWM393*23059, AWM393*23069, NWM393*-3059, ZWM372*-3059, ZWM373*-3059 and ZWM373*-3069
	38362P	Lead-In Cord	Models AWM392*-3000, AWM392*-3300, AWM393*-3000, AWM393*-3300, AWM392*23000, AWM392*23300, AWM393*23000 and AWM393*23300
	34458	Lead-In Cord	All other models
5	00359	Ultra Pod Terminal	
6	00116	Male Pin Terminal	
7	26302	1 Circuit Plug	
	23041	6 Circuit Plug	
	23033	9 Circuit Plug	
8	N/A	Harness Holder Clip	
9	26301	1 Circuit Receptacle	
	26708	6 Circuit Receptacle	
	26163	9 Circuit Receptacle	
10	00117	Female Pin Terminal	
11	55881	Harness Strap	
12	21036	Cable Clip	
13	36274	Wire Clip	
14	00161	Grounding Clip	
15	51291	Wire Clip	
16	504034	Wire Clip	
17	70210	Insulator	
18	00112	Female Spade Terminal	Small spade
19	00223	Female Spade Terminal	Large spade
20	N/A	Single Crimp Terminal	Female; 1/4 inch
21	00120	Female Flag Terminal	
22	00113	Ring Terminal	1/4 inch ring
23	00110	Ring Terminal	Small shank
24	21091	Connector	
25	29673	Terminal Adapter	

*** Add Letter To Designate Color. H - Harvest Gold L - Almond W - White**

N/A = Part no longer available

© Copyright, Alliance Laundry Systems LLC – DO NOT COPY or TRANSMIT

Wire Harnesses and Wires

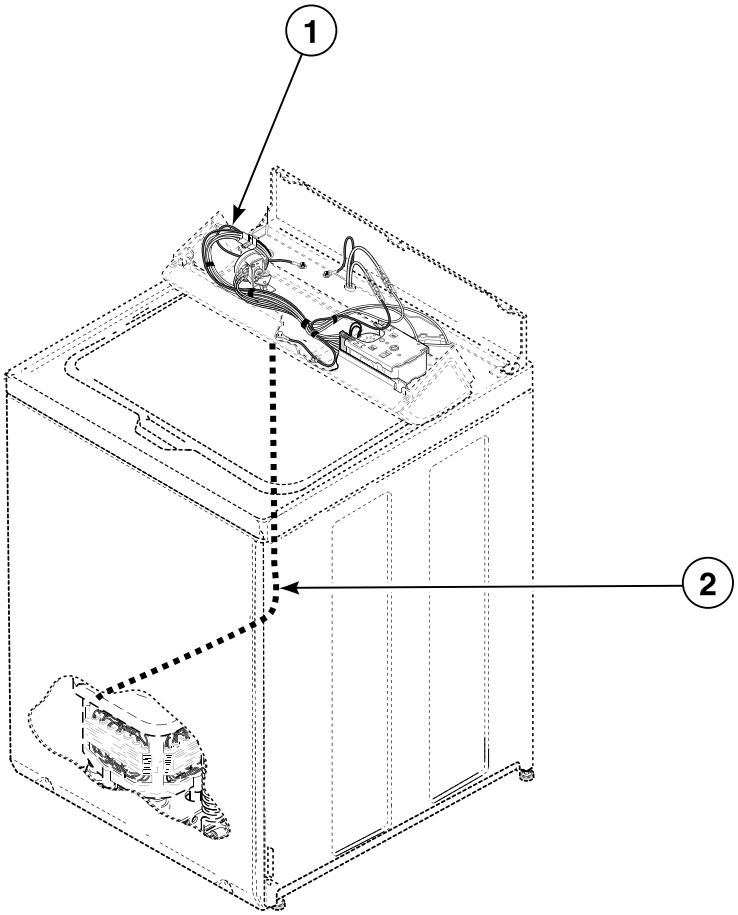

TLW1536P_36313

© Copyright, Alliance Laundry Systems LLC – DO NOT COPY or TRANSMIT

Wire Harnesses and Wires

REF	PART NO.	DESCRIPTION	COMMENTS
	35854	Pump Wire Harness Assembly	Models AWM372*-3062, AWM373*-3062, KAW693*-3050, KAW793*-3050, RWM274*-3062, RWM372*-3062 and RWM373*-3062
	38068	Pump Wire Harness Assembly	Model KAW393*-3050
	31973	Lid Lock Wire Harness Assembly	Models AWM393*-3059, AWM393*23059, AWM393*23069, NWM393*-3059, ZWM372*-3059, ZWM373*-3059 and ZWM373*23069
	N/A	Lid Lock Light and Harness	Models AWM393*-3059, AWM393*23059, AWM393*23069, NWM393*-3059, ZWM372*-3059, ZWM373*-3059 and ZWM373*23069
	N/A	Lid Lock Switch Assembly Harness	Models AWM393*-3059, AWM393*23059, AWM393*23069, NWM393*-3059, ZWM372*-3059, ZWM373*-3059 and ZWM373*23069
	45001	18 Gauge Wire	Black; Order wire by foot and terminals as required
	45380	12 Gauge Wire	Orange; Order wire by foot and terminals as required
1	36059	Hood Wire Harness Assembly	Model AWM251*-99E7
	28440	Wire Harness Assembly	Hood; Models AWM270*-3062, AWM372*-3062 and AWM373*-3062
	35926	Hood Wire Harness Assembly	Models AWM372*-3062 and AWM373*-3062
	35534P	Hood Wire Harness Assembly	Models AWM393*-3050 and AWM393*23050
	34833	Hood Wire Harness Assembly	Models AWM593*-2200, AWM593*22200, KWM573*-1109 and UWM593*-1102
	N/A	Hood Wire Harness Assembly	Models AWM393*23069 and ZWM373*23069
	39808	Hood Wire Harness Assembly	Model KAW393*-3050
	35852	Hood Wire Harness Assembly	Model KAW693*-3050
	39809P	Hood Wire Harness Assembly	Model KAW793*-3050
	34529	Hood Wire Harness Assembly	Model KWM472*-1109
	N/A	Wire Harness Assembly	Hood; Model PA9693*-2200
	38076	Hood Wire Harness Assembly	Models RWM274*-3062, RWM372*-3062 and RWM373*-3062
	N/A	Hood Harness	Model SWM190*
	N/A	Wire Harness Assembly	Hood; Model UWE993*-1102
	34971P	Hood Wire Harness Assembly	All other models
2	N/A	Base Wire Harness Assembly	Model KAW393*-3050
	36277	Base Wire Harness Assembly	Model AWM393*-3050
	36276	Base Wire Harness Assembly	Models AWM372*-3062, AWM373*-3062, KAW693*-3050, KAW793*-3050, PA9693*-2200, RWM274*-3062, RWM372*-3062 and RWM373*-3062
	36278P	Base Wire Harness Assembly	All other models

*** Add Letter To Designate Color. H - Harvest Gold L - Almond W - White**

N/A = Part no longer available

NOTE: Individual wires are not available separately. Order complete harness, or order wire by the foot. When applying terminals to wires, it is recommended that the terminals be soldered to the wires.

© Copyright, Alliance Laundry Systems LLC – DO NOT COPY or TRANSMIT

Notes

© Copyright, Alliance Laundry Systems LLC – DO NOT COPY or TRANSMIT

Parts Index

A

Actuator Arm
33441 35

Agitator
33174 45
33513 45
33514 45

Agitator Cap
36515 45

Agitator Drive Bell Puller
294P4 81

Agitator Hook
254P4P 79

Agitator Pinion
27003 71

Anti-Seize Compound
27604P 69

B

Backflow Preventer
34500 41

Balance Ring Assembly
34731P 69

Base Kit
34434P 73
36599P 73

Base Wire Harness Assembly
36276 85
36277 85
36278P 85

Bearing Housing Assembly
27182 69
35746 67

Bell and Transmission Tube Seal
36425 47

Bell Plug
36511 45

Belt
28808 49
35517 ..... 49, 51

Bit Holder
24161 79

Bleach Dispenser
34776 ..... 37, 39

Bolt
294P4B 81
32184 37

Bracket
36036 73
36037 73

Brake Kit
38505P 67

Brake Pad Kit
548P3 67

Bumper
21685 ..... 37, 39

Bumper Pad
36226 73
56128 73

Bushing
33446 ..... 37, 39

C

Cable Clip
21036 83

Cap
24145 41

Capacitor Kit
258P3 ..... 49, 51

Circuit Board Support
501523 19

Clothes Guard
35035 47

Connector
21091 83

Control Hood
31224 31

Control Hood Assembly
31735 ..... 9, 23
37843 ..... 9, 23
37845 ..... 7, 19, 21

Control Lid Lock Assembly
37225P 19

Control Support Panel
38171 ..... 25, 27

Cover Plate
37828P 37

D

Director Bracket
36034 ..... 37, 39

Disconnect Power Warning Label
505281 ..... 37, 39

Door Latch Gasket
29677 37

Drain Extension Kit
451P3 ..... 55, 57

Drain Hose
28293 ..... 59, 61
39950 55
39951 63
39953 57

Drain Hose Elbow
35766 ..... 59, 61

Drain Hose Sleeve
33615 ..... 55, 57, 63

Drain Pump
39255P 65

Drive Bell and Seal Kit
39508P 45

Drive Bell Puller Arm
294P4A 81

N/A items do not appear in index.

© Copyright, Alliance Laundry Systems LLC – DO NOT COPY or TRANSMIT

Drive Bell Seal Tool
293P4 79
Drive Pinion
36562P 71

E

Electric Lid Lock Kit
598P3 ..... 17, 21
Electric Pump Kit
648P3 65
End Cap
31248 ..... 7, 9, 11, 13, 15, 17, 19, 21, 23, 31, 33
31249 ..... 7, 9, 11, 13, 15, 17, 19, 21, 23, 31, 33
34459 ..... 23, 29
34460 ..... 23, 29
End Panel
504008L 25, 27
504008WP 25, 27
504009L 25, 27
504009WP 25, 27

F

Fabric Softener Dispenser Assembly
33510 45
36542 45
Female Flag Terminal
00120 83
Female Pin Terminal
00117 83
Female Spade Terminal
00112 83
00121 77
00223 83
Female Terminal
00188 ..... 77, 83
Fill Hose
35385 41
37380 41
37381 41
Fill Hose Kit
28330P 41
38349P 41
Flex Vane Agitator
36507 45
Flinger
27187 69
Front Panel Assembly
34656LP 73
34656WP 73
Front Panel Brace
35097 73

G

Gear and Stud Assembly
26577 71
Graphic Panel
35233 9
35626 7
35627 7
37002WP 27
38071 25
38072 25
38360P 25
Grease
36765P 47
Grommet
29175 53
80262 39
Grounding Clip
00161 83

H

Harness Strap
55881 83
Helix
27018 67
Hex Wrench Tool
306P4 79
Hinge Gasket
34338 ..... 37, 39
Hinge Stop Clip
36519 39
Hold-Down Clip
35358 ..... 25, 27
35865 73
Hold-Down Lug Hinge
27103 73
Hood and Mounting Bracket Assembly
31811 ..... 9, 11, 13, 15, 17, 19, 29, 33
Hood Back Panel
37782 ..... 17, 19, 21, 39
Hood Wire Harness Assembly
34529 85
34833 85
34971P 85
35534P 85
35852 85
35926 85
36059 85
38076 85
39808 85
39809P 85
Hose Clamp
20211 ..... 57, 59, 61
20391 ..... 59, 61, 63
29210 41
36801 41
36802 ..... 55, 57, 59, 61, 63
Hose Clip
36985 53
Hose Coupler
25863 ..... 59, 61
Hose Support
35487 ..... 55, 57, 59, 61, 63
36522 ..... 55, 57, 59, 61, 63
Housing, 24 Position
32746 83
34123 83
Hub and Seal Kit
495P3A 47

N/A items do not appear in index.

© Copyright, Alliance Laundry Systems LLC – DO NOT COPY or TRANSMIT

I

Idler Lever
31054 ..... 49, 51
37443 ..... 49, 51

Idler Lever Helper Spring
30620 ..... 49, 51

Idler Lever Spring
37606 ..... 49, 51

Idler Pulley
28800P 49, 51

Idler Shaft
28802P 49, 51

Idler Spring
37366 ..... 49, 51

Input Shaft
34853P 71

Insulator
70210 83

K

Knob Assembly
33688 ..... 7, 19, 21
36701L 25, 27
36701W 25, 27

L

Lamp Diffuser
34826 ..... 25, 27

Lead-In Cord
34458 83
38362P 83
38365 83

Lead-In Cord Assembly
36770 83

Leg and Stabilizer Assembly
34443 73

Leg Plate
27926 53

Leg Spring
35948 53

Leveling Leg
34319 73

Lid
33541LP 39
33541WP 39
33552L 37
33552W 37
34199WP 39

Lid Hinge
36437 ..... 37, 39
36438 ..... 37, 39
36513 39

Lid Lock Gasket
30378 37

Lid Lock Kit
837P3 37

Lid Lock Wire Harness Assembly
31973 85

Lid Switch Indicator Light
39536 ..... 17, 19, 21

Lid Switch Installation Tool
272P4 81

Lint Filter
39371 47

M

Male Pin Terminal
00116 83

Mixing Valve
33930P 43
34963P 43
34997P 43
35856P 43

Mixing Valve Coil
34963A 43

Mixing Valve Mounting Bracket
39407 41

Mixing Valve Plug
34675 77
34676 77

Mixing Valve Solenoid
33930A 43

Mixing Valve-to-Tub Cover Hose
38155 41

Motor Assembly
35030P 49
35555P 51
35559P 51
36256P 49
36381P 51

Motor Bracket and Idler Lever Kit
37415P 49, 51

Motor Kit
201615P 49
37543P 49
38034P 49
38035P 49
38036P 49

Motor Mount
34788 ..... 49, 51

Motor Mount Post
34791 ..... 49, 51

Motor Mounting Bracket
37415 ..... 49, 51

Motor Shield
34754 ..... 49, 51
35886 51

Motor Switch
35632P 49, 51

N

Nut
Q6163 75
02788 ..... 17, 21
03673 75
21899 73
22001 37
24206 ..... 17, 19, 21
27222 69

N/A items do not appear in index.

© Copyright, Alliance Laundry Systems LLC – DO NOT COPY or TRANSMIT

28447 73
28803 ..... 49, 51
29220 47
35423 ..... 49, 51
52566 ..... 49, 51
57584 ..... 7, 9, 11, 13, 15, 17, 19, 21, 23, 33

O

Option Switch
36951 27
O-Ring
36472 45
Outer Tub Assembly
34438P 53
Outer Tub Kit
34439P 53
Output Shaft
36570P 71

P

Panel Locator
28102 73
56079 73
Pivot Dome
34470 67
Plug, 1 Circuit
26302 83
Plug, 10 Circuit
34677 77
Plug, 6 Circuit
23041 83
Plug, 9 Circuit
23033 83
Pressure Bulb
30907 53
Pressure Switch
201927P 7, 9, 11, 13, 15, 17, 19, 21, 25, 27, 31, 33
36251 23
39035P 7
Pulley Assembly
34921 67
34923 67
35310 67
Pump
201566P 49
Pump Assembly
31969 ..... 57, 59
Pump Belt
28043 51
Pump Isolator
38095 65
Pump Mounting Bracket
35162 ..... 57, 59
35819 65
36492 65
Pump Shield
38067 65
Pump Wire Harness Assembly
35854 85
38068 ..... 65, 85
Pump-to-Drain Elbow Hose
27161 59
35921P 61

R

Rack
201664 71
Receptacle, 1 Circuit
26301 83
Receptacle, 6 Circuit
26708 83
Receptacle, 9 Circuit
26163 83
Reduction Gear
29161P 71
Retainer Clip
36014 ..... 55, 57, 61, 63
Retaining Ring
23748 ..... 49, 51
27197 71
Ring Terminal
00110 83
00113 83
Roll Pin
28087 51
Rubber Foot
34318 73

S

Screw
M400057 69
Q6535 75
Q6695 37
201773 71
23962 ..... 7, 9, 11, 13, 15, 17, 19, 21, 23, 25, 27, 29, 33, 35, 39
27196 73
27202 47
27220 67
27229 ..... 49, 51
28448 73
29273 71
31260 ..... 7, 9, 11, 13, 15, 17, 19, 21, 23, 29, 31, 33
31752 ..... 9, 11, 13, 15, 17, 19, 23, 29, 31, 33
32814 71
32993 ..... 7, 19, 21
33562 ..... 37, 39, 41
34337 ..... 37, 39
34565 49
35148 73
35369 ..... 53, 67
36510 35
36639 ..... 49, 51
38096 65
39432 45
39733 73
501086 ..... 25, 27, 41
503661 ..... 49, 51, 57, 59, 61, 63
51780 73
52909 ..... 37, 39, 59, 61, 83
Service Cabinet Kit
38612LP 73

N/A items do not appear in index.

© Copyright, Alliance Laundry Systems LLC – DO NOT COPY or TRANSMIT

38612WP 73
Silicone Grease
26594P 67
Siphon Break Kit
562P3 ..... 55, 57, 59, 61, 63
Slide
26493 71
Snubber Pad Assembly
36108 73
Spline Insert
29728 47
Spring
33435 67
33443 35
Spring Clip
28849 ..... 49, 51
Spring Hook Tool
321P4 79
Spring Installer
242P4 81
Standpipe Strap
33489 ..... 55, 57, 63
Strain Relief
32219 ..... 55, 57, 63
38384 39
Strainer
F270200 43
Support Barrel
56534 ..... 37, 39
Support Leg
34471 67
34792 67
Switch
33445 35
Switch Assembly
55882 ..... 17, 19, 21
Switch Holder Clip
33433 35
Switch Holder Kit
36497P 35
Switch Mounting Plate
29676 37

T

Temperature Switch
21300 ..... 7, 9, 11, 13, 15, 17, 19, 21, 33
35115 ..... 7, 9, 11, 13, 15, 17, 19, 21, 25, 33
35117 ..... 23, 25, 27
36335 ..... 7, 9, 11, 33
Terminal Adapter
29673 83
Terminal Block Assembly
50854A 75
Terminal Extractor Tool
283P4 77
Timer
201013P 7, 25
31238P 9, 11, 27, 29
31239P 7, 9, 11, 33
31240P 23
31241P 13, 15, 17, 19, 21
31242P 13, 15
31243P 13, 15
32039P 7, 9, 33
35531P 13, 15
35785P 23
36288P 7
36608P 11
37004P 27
37995P 25
Timer Knob
201501W 25, 27
33897 ..... 9, 11, 13, 15, 17, 19, 23, 27, 29, 33
33898W 7, 19, 21
Timer Skirt Assembly
33817 ..... 7, 9, 11, 13, 15, 17, 19, 21, 23, 27, 29, 33
36700L 25, 27
36700W 25, 27
Tool Kit
725P3 79
Top Assembly
34902LP 39
34902WP 39
Top Cover
34824L 25, 27
34824W 25, 27
Top Shield
39744 39
Torx Bit
281P4 79
282P4 79
Transmission Assembly
34526P 69
Transmission Case Assembly
33223P 71
Transmission Cover Assembly
38290P 71
Transmission Oil
27243P 71
Transmission Pin Tool
305P4 81
Transmission Sealant
37577P 71
Trim
33123R 7, 9, 11, 19, 23, 31, 33
Tub Assembly
39240P 47
39252P 47
39387P 47
Tub Cover Gasket
32857 53
Tub Cover Kit
36025P 53
Tub Cover Removal Tool
273P4 79
Tub Spring
35947 53
Tubing
39125 53
Tub-to-Pump Hose
35752 ..... 55, 59
35753 55
35755 57

N/A items do not appear in index.

© Copyright, Alliance Laundry Systems LLC – DO NOT COPY or TRANSMIT

U

Ultra Pod Terminal
00359 83

Unbalanced Load Lever
33442 35

Upper or Lower Bearing
28944RP 67

W

Warning Label
500049 53
500316 39

Warning Sticker
36592 37

Washer
20290 41
20492 75
21456 71
21643 37
25820 ..... 17, 19, 21
26509 ..... 67, 71
27015 67
28094 47
29260 71
29443 ..... 49, 51
35092 71
35535 67
52549 ..... 49, 51
81392 ..... 49, 51

Washtub Gasket
39122 47

Washtub Kit
719P3 47

Water Temperature Switch
32189 ..... 7, 9, 11, 33

Wire Clip
36274 83
504034 83
51291 83

Wire Harness Assembly
28440 85

Wire, 12 Gauge
45380 85

Wire, 18 Gauge
45001 85

N/A items do not appear in index.

© Copyright, Alliance Laundry Systems LLC – DO NOT COPY or TRANSMIT